www.valve-yz.com

YU ZHENG 誉正阀门



温州誉正阀门有限公司
WENZHOU YUZHENG VALVE PIPE-FITTING CO.,LTD

电话：86-577-86961077 86961078
传真：86-577-89734898
P.C ：325024
邮箱：info@valve-yz.com
网址：www.valve-yz.com
地址：温州龙湾区永兴街道书院东路11号

Tel : 86-577-86961077 86961078
Fax : 86-577-89734898
P.C ：325024
E-mail : info@valve-yz.com
Url : www.valve-yz.com
Add : No.11,Shuyuan East Road,
Yongxing Zone,Longwan,Wenzhou,china

© 温州誉正阀门有限公司 版权所有
◎ 若有改动，恕不另行通知，请用户使用最新版本，本公司拥有最终解释权

♻ 采用生态纸印刷/亚泰彩印/13157707088

温州誉正阀门有限公司
WENZHOU YUZHENG VALVE PIPE-FITTING CO.,LTD

CREATE A BETTER
TOMORROW

YU ZHENG 誉正阀门

INDUSTRIAL PRODUCTS VOLUMES



企业简介 ABOUT US

温州誉正阀门有限公司成立于1998年，是一家集生产，研发，销售与贸易为一体的企业。坐落于温州市区东部:龙湾中心工业区，紧靠温州永强机场，龙湾万吨码头，交通便利，环境优美。

我公司拥有先进的设备及检验仪器，精良的工艺以及严格完善的质量管理体系，并具有专业技术精英和领先的科技队伍，充分利用新技术、新工艺、新材料保证产品的稳定性和可靠性。产品质量取源于制造手段的先进、精品意识源于不断的创新。不管世界如何变化，誉正人精益求精的执着精神不变。

展望未来，本公司更真诚期望与国内外客户建立长期友好的合作关系;创造更加丰硕的成果来回报社会，共创美好的明天。

Established in 1998, WENZHOU YUZHENG VALVE PIPE— FITTING CO.,LTD is a collection of production,research and development, sales, trading in one of private company. Located in YongXing Industry Zone of LongWan— China valve city, the company enjoys so convenient traffic conditions that is only 3KM away from Wenzhou International Airport and only 2KM away from the highway.

Over many years, with the advanced CNC lathes, processing equipment reputation and facilities, super process technology and excellent product quality, our products enjoyed a good among vast users. The main products include ball valve, butterfly valve, gate valve, check valve, fitting, flange and pipes.

The company will continue to adhere to the operation conception of "becoming specialized and stronger" carry forward the enterprise sprit of "quality first, credit first".In the future, we would endeavour to concentrate on building "YUZHENG" brand and dedicating to provide superior quality products.

Sincerely service for your needs!

专业技术/品质服务

PROFESSIONAL AND TECHNICAL
QUALITY OF SERVICE



专业技术，现代管理
精益求精，高精产品

Professional technology, modern management
Excellence, high precision products



以高起点为依托，以高质量求发展。

Relying on a high starting point, high-quality development.

目　录 CONTENTS

VALVE PART

1 … ……一片式内螺纹球阀系列
1PC Thread Ball Valve Series

3 … ……二片式内螺纹球阀系列
2PC Thread Ball Valve Series

5 … ……三片式内螺纹球阀系列
3PC Thread Ball Valve Series

12 … ……气动、电动、法兰球阀系列
Pneumatic/Electic actuator/Flanged Ball Valve Series

13……不锈钢内螺纹止回阀系列
Stainless Steel Thread Check Valve Series

15……Y型内螺纹过滤器系列
Y Type Thread Strainer

16……不锈钢内螺纹闸阀系列
Stainless Steel thread gate valve series

17……内螺纹截止阀系列
Thread Globe Valve Series

18……角座阀系列
Flanged Pneumatic Angle seat Valve Series

23……法兰球阀系列
Flanged Ball Valve Series

28……法兰截止阀系列
Flang Globe Valve Series

32……法兰闸阀系列
Flanged Gate Valve Series

36……法兰止回阀系列
Flanged Check Valve Series

41……法兰Y型过滤器系列
Y type Flanged Strainer Series

FITTING PART

43……快装接头系列
Quick Connector Series

49……丝扣管件系列
Threaded Fittings Series

57……不锈钢无缝管件系列
Stainless Steel Semless Fitting Series



Whatsapp:+852-59345951　E-mail: info@valve-yz.com　Skype: blue.sky13

一片式内螺纹球阀1PC Thread ball valve



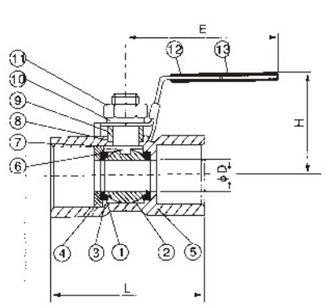



应用规范Application Norm

公称压力：1.6-6.4MPa

适用温度范围：-20~232℃~350℃

适用介质：水、油、气及某些腐蚀性液体(W、O、G)

螺纹类型：G·NPT.BSPT.BSP.DIN259/2999

Nominal pressuree：1.6-6.4MPa
Temperature Range：-20-232℃~350℃
Applying medium：water，oil，air and some CorrosiVe liquid(W、O、G)
Thread type：G·NPT.BSPT.BSP.DIN259/2999

主要零件材料Main parts and materials

序号 Number	零件名称 Part name	材质 Material
1	密封圈 Joint ring	聚四聚乙烯 PTFE
2	球体 Ball	不锈钢 Stainless steel SS316
3	密封垫 Joint Gasket	聚四氟乙烯 PTFE
4	阀盖 Valve Cap	不锈钢 Stainless steel SS316
5	阀体 Valve Boby	不锈钢 Stainless steel CF8M
6	阀杆 Valve Stem	不锈钢 Stainless steel SS316
7	止推垫圈 Thrust washer	聚四氟乙烯 PTFE
8	填料 Packig	聚四氟乙烯 PTFE
9	填料压盖螺母 Gland nut	不锈钢 Stainless steel SS304
10	垫圈 Washer	不锈钢 Stainless steel SS304
11	阀杆螺母 Stem nut	不锈钢 Stainless steel SS304
12	手柄套 Handle sleeve	塑料 Packing
13	手柄 Handle	不锈钢 Stainless steel SS304

主要尺寸 Main dimensions

单位:mm Unit:mm

SIZE	1/4"	3/8"	1/2"	3/4"	1"	11/4"	11/2"	2"
D	5.0	7.0	9.2	12.5	15.0	20.0	24.5	32
L	40	45	55.4	58.5	69.3	77	82	95.5
H	35	37	43.5	47	50	57	69	74.5
E	64	70	90	90	103	103	127	127

Whatsapp:+852-59345951 E-mail: info@valve-yz.com Skype: blue.sky1

YUzheng Valve Pipefitting Manufacturing 誉正阀门 www.valve-yz.com

一片式内螺纹连接六角碳钢球阀 Hexagonal carbon steel ball valve



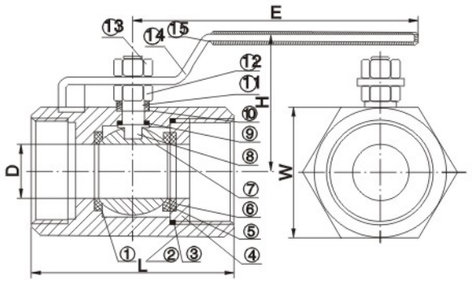

技术规范

>设计标准：GB/T12224、GB/T8464
>压力-温度额定值：GB/T12224
>结构长度：GB/T15188.3
>连接螺纹标准：G、Rc、Rp、NPT、BSP、BSPT、DIN259/2999
>试验与检验标准：GB/T13927
>主要材质：WCB、CF8(304)、CF8M(316)
>驱动方式：手动

Technical Standard

>Design Standard:GB/T12224、GB/T8464
>Pressure-Temperature Rating:GB/T12224
>Face To Face Std:GB/T15188.3
>End Connection Std:G、Rc、Rp、NPT、BSP、BSPT、DIN259/2999
>Test Standard:GB/T13927
>Material:WCB、CF8(304)、CF8M(316)
>Operated Way: Handle

材料列表 Materiallist

No	部件名称	Part Name	材料 Material	QTY
1	下密封圈	Joint ring	PTFE	1
2	阀体	Body	A105	1
3	密封垫	Joint gasket	PTFE	1
4	锁紧螺母	Lock nut	A105	1
5	上密封圈	Joint ring	PTFE	1
6	垫片	Stem washer	304	1
7	球体	Ball	304/316	1
8	阀杆	Stem	304/316	1
9	止推垫片	Thrust washer	PTFE	1
10	填料	Stem packing	PTFE	1
11	填料压套	Gland	304	1
12	填料压盖	Gland nut	304	1
13	阀杆螺母	Stem nut	304	1
14	手柄	Handle	A3	1
15	手柄套	Handle cover	塑料PLASTIC	1

性能规范 Specifications

公称通径 Size Range	公称压力 Working Pressure	适用温度 Suitable Temperature	适用介质 Suitable Medium
DN	PN	-29~200℃	CF8(304)硝酸类 Nitric acid
6~100mm	1.6~6.4MPa		CF8M(316)醋酸类 Acetic acid
			水、天然气、油品等 Water Natural gas 、Oil

尺寸列表 Dimension List

单位 Unit:mm

Size / Item	1/4"	3/8"	1/2"	3/4"	1"	1 1/4"	1 1/2"	2"
D	5.0	7.0	10.5	12.5	15	20	25	32
L	41	57	60	67	74	74	83	114
H	23	34	35	40	67	75	83	90
E	65	91	95	99	100	105	135	160
W	19	27	30	35.5	42	53	48	74.5

Whatsapp:+852-59345951 E-mail: info@valve-yz.com Skype: blue.sky1

迷你型外螺纹球阀 Mini ball valve(M/M)



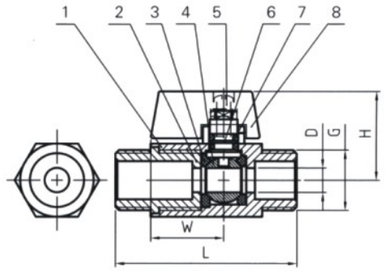

特点:
- ◎管螺纹可按:NPT.BSPT.BSPP
- ◎温度范围:-20℃--150℃
- ◎适用介质:水、油、气
- ◎公称压力:1.6~6.4MPa
- ◎精密铸造阀体
- ◎材质:CARBON STEEL/SCPH2/WCB
  STAINLESS STEE/304/SCS13
  STAINLESS STEE/316/SCS14

FEATURES:
- ◎PIPE THREAD IN ALLORDANCE:NPT.BSPT.BSPP
- ◎TEMPERATURE RANGE:-20℃~150℃
- ◎SUITABLE IVIEDIUIVI: WATE、OIL、AIR
- ◎NOMINAL PRESSURE: 1.6~6.4MPa
- ◎INVESTMENT CASTING BODY
- ◎MATERIAL: CARBON STEE/SCPH2/WCB
  STAINLESS STEE/304/SCS13
  STAINLESS STEE/316/SCS14

主要零件材料
Main parts and materials

NO	NAME	MATERIAL
1	BODY	SS304/SS316
2	CAP	SS304/SS316
3	SEAT	PTEE
4	BALL	SS304/SS316
5	SCREW	SS304/SS316
6	STEM	SS304/SS316
7	O-RING	NBR
8	HANDLE	SS304/SS316

PRESSURE TEMPERATURE
1/4"-4"

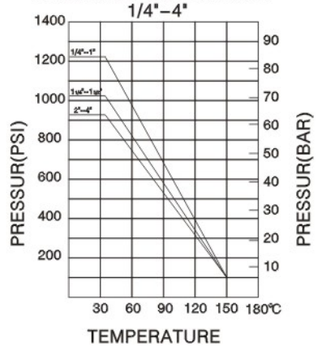

尺寸列表 Dimension list

NPS	G	D	L	W	H
DN6	1/4"	7	50	23	26
DN10	3/8"	7	50	23	26
DN15	1 /2"	9	58	23	28
DN20	3 /4"	12	70	23	31
DN25	1"	15	83	23	34

Whatsapp:+852-59345951 E-mail: info@valve-yz.com Skype: blue.sky1

迷你型球阀 Mini ball valve



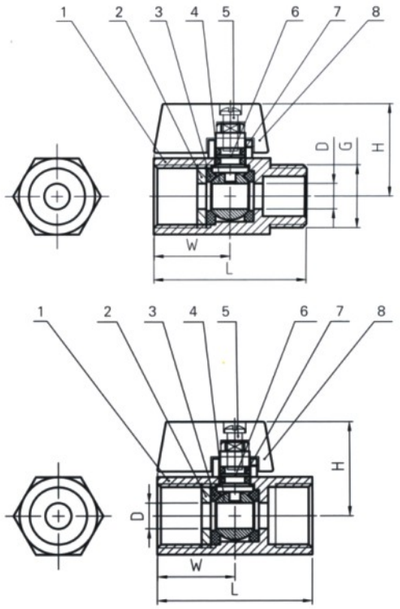

特点:
- ◎螺纹可按:NPT.BSPT.BSPP
- ◎温度范围:-20℃-150℃
- ◎适用介质:水、油、气体
- ◎公称压力:1.6~6.4MPa
- ◎精密铸造阀体材质:CARBON STEE/SCPH2/WCB
  STAINLESS STEE/304/SCS13
  STAINLESS STEE/316/SCS14

FEATURES:
- ◎PIPE THREAD IN ACCORDANCE: NPT.BSPT.BSPP
- ◎TEMPERATURE RANGE:-20℃~150℃
- ◎SUITABLE MEDIUM:WATER,OIL,AIR
- ◎NOMINAL PRESSURE:1.6~6.4MPa
- ◎INVESTMENT CASTING BODY
- ◎MATERIAL: CARBON STEE/SCPH2/WCB
  STAINLESS STEE/304/SCS13
  STAINLESS STEE/316/SCS14

主要零件材料
Main parts and materials

NO	NAME	MATERIAL
1	BODY	SS304/SS316
2	CAP	SS304/SS316
3	SEAT	PTEE
4	BALL	SS304/SS316
5	SCREW	SS304/SS316
6	STEM	SS304/SS316
7	O-RING	NBR
8	HANDLE	SS304/SS316

尺寸列表 Dimension list

NPS	G	D	L	W	H
DN6	1/ 4"	7	42	23	26
DN10	3/ 8"	7	42	23	26
DN15	1/ 2"	9	46	23	28
DN20	3/ 4"	12	54	23	31
DN25	1"	15	62	23	34

PRESSURE TEMPERATURE
1/4"-4"

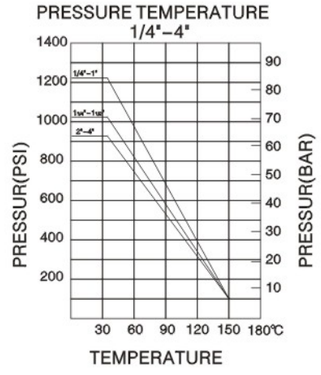

Whatsapp:+852-59345951 E-mail: info@valve-yz.com Skype: blue.sky1

二片式球阀，德标M3 2PC Ball valve



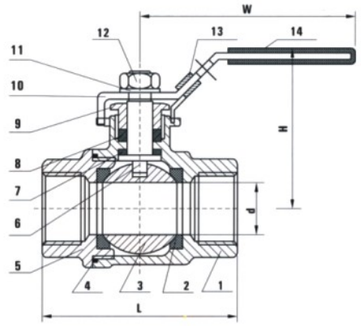

产品说明
- 精密铸造阀体
- 防脱出阀杆
- 全通径设计
- 球槽减压孔设计
- 各种标准螺纹: NPT/BSPP/BSPT/PT
- 带锁手柄可选配
- 工作压力: 1000PSI/PN63

标准
- 设计标准：ASME B16.34
- 结构长度标准：DIN3202-M3
- 螺纹标准：ANSI B1.20.1
  BS 21/2799
  DIN 259/2999
  ISO 228
- 检测标准：API598

PRODUCT DESCRIPTION:
Investment Casting Body
Blow-Out Proof Stem
Full Port
Pressure Blance Hole In Ball Slot
ThreadsTypes: NPT/BSPP/BSPT/PT
Locking Deuice Handle Available
Working Pressure:1000PSI/PN63

STANDARD:
Design Acc: ASME B16.34
Length Acc:DIN3202-M3
Threads Acc: ANSI B1.20.1
  BS 21/2799
  DIN 259/2999
  ISO 228
Inspection&Testing Acc: API 598

主要零件材料 Main parts and materials

Item	Part 零配件		Material 材质		
1	Body	阀体	CF8M	CF8	WCB
2	Ball Seat	阀座	PTFE/RPTFE		
3	Ball	球体	316	304	304
4	Body Gasket	密封圈	PTFF		
5	Cap	阀盖	CF8M	CF8	WCB
6	Stem	阀杆	316	304	304
7	Thrust Washer	止推垫片	PTFE		
8	Stem Packing	填料	PTFE		
9	Gland Nut	压盖	304		
10	Handle	手柄	304		
11	Sping Washer	弹簧垫圈	304		
12	Nut	螺母	304		
13	Locking Device	锁装置	301		
14	Handle Cover	手柄套	Plastic		

尺寸列表 Dimension list

Size	ϕd	L	H	W
1/4"	10.5	50	50	100
3/8"	12	60	50	100
1/2"	15	75	60	130
3/4"	20	80	64	130
1"	25	90	71	165
1-1/4"	32	110	78	165
1-1/2"	38	120	86	190
2"	49	140	95	190
2-1/2"	65	185	130	215
3"	78	205	148	250
4"	100	240	180	280

Whatsapp:+852-59345951 E-mail: info@valve-yz.com Skype: blue.sky1

YUzheng Valve Pipefitting Manufacturing 誉正阀门 www.valve-yz.com

二片式高平台内螺纹球阀 2PC High mounting pad screwed ball valve



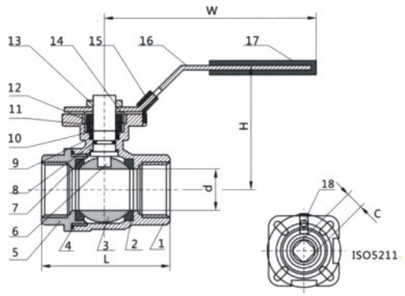

产品说明
- 精密铸造阀体
- 防脱出阀杆
- 全通径设计
- 球槽减压孔设计
- 直装平台设计
- 防静电设计
- 各种标准螺纹: NPT/BSPP/BSPT/PT
- 带锁手柄可选配
- 工作压力:1000PSI/PN63
- DIN3202-M3结构长度可选

标准
- 设计标准:ASME B16.34
- 螺纹标准:ANSI B1.20.1
  BS 21/2799
  DIN 259/2999
  ISO 228
- 检测标准:API598

PRODUCT DESCRIPTION:
Investment Casting Body
Blow-Out Proof Stem
Full Port
Pressure Blante Hole In Ball Slot
ISO 5211 Direct Mounting Pad
Anti-Static Device on Ball and Body
Threads Types: NPT/BSPP/BSPT/PT
Lacking Device Handle Available
Working Pressure:1000PSI/PN63
Length Acc to DIN 3202 -M3 is available

STANDARD:
Design Acc: ASME B16.34
Threads Acc:ANSI B1.20.1
  BS 21/2799
  DIN 259/2999
  ISO 228
Inspection&Testing Acc: API 598

主要零件材料 Main parts and materials

Item	Part 零配件		Material 材质		
1	Body	阀体	CF8M	CF8	WCB
2	Ball Seat	阀座	PTFE/RPTFE		
3	Ball	球体	316	304	304
4	Body Gasket	密封圈	PTFE		
5	Cap	阀盖	CF8M	Cf8	WCB
6	Stem	阀杆	316	304	304
7	Thrust Washer	止推垫片	PTFE		
8	O-Ring	O型圈	VITON		
9	Stem Packing	填料	PTFE		
10	Gland Nut	压盖	304		
11	Bellevelle Washer	螺簧	301		
12	Stap Nut	止动垫圈	304		
13	Nut	螺母	304		
14	Stap Washer	止动垫圈	304		
15	Locking Device	锁装置	301		
16	Handle	手柄	304		
17	Handle Cover	手柄套	Plastic		
18	Location Pin	定位插销	301		

尺寸列表 Dimension list

Size	ϕd	L		H	W	C	ISO5211
		Normal type	DIN3202-M3				
1/4"	10.5	50	50	60	110	9	F03
3/8"	12	50	60	60	110	9	F03
1/2"	15	60	75	64	110	9	F03/F04
3/4"	20	70	80	80	120	9	F03/F04
1"	25	90	90	93	145	11	F04/F05
1-1/4"	32	95	110	95	145	11	F04/F05
1-1/2"	38	106	120	126	160	14	F05/F07
2"	49	120	140	129	170	14	F05/F07
2-1/2"	65	160	185	148	230	17	F07/F10
3"	78	180	205	152	260	17	F07/F10
4"	100	220	240	187	300	19	F07/F10

Whatsapp:+852-59345951 E-mail: info@valve-yz.com Skype: blue.sky1

二片式内螺纹球阀2PC Thread ball valve





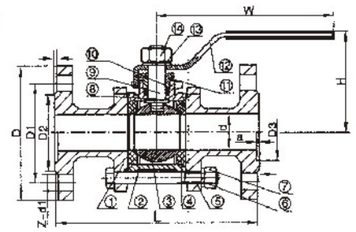

应用规范Application Norm

公称压力：1.6–6.4MPa
适用温度范围：–20～232℃～350℃
适用介质：水、油、气及某些腐蚀性液体(W、O、G)
螺纹类型：G・NPT.BSPT.BSP.DIN259/2999

Nominal pressuree:1.6–6.4MPa
Temperature Range:–20～232℃～350℃
Applying medium:water,oil,air and some CorrosiVe liquid(W、O、G)
Thread type:G・NPT. BSPT.BSP.DIN259/2999

主要零件材料Main parts and materials

序号Number	零件名称 Part name	材质 Material	
		不锈钢 Stainless steel	碳钢 Carbon steel
1	阀体Valve Body	不锈钢Stainless steel CF8M	不锈钢Stainless steel WCB
2	球体Valve Ball	不锈钢Stainless steel SS316	不锈钢Stainless steel SS304
3	密封圈Joint ring	聚四氟乙烯PTFE	聚四氟乙烯PTFE
4	密封垫Joint Gasket	聚四氟乙烯PTFE	聚四氟乙烯PTFE
5	阀盖ValVe Cap	不锈钢Stainless steel CF8M	不锈钢Stainless steel WCB
6	阀杆ValveStem	不锈钢Stainless steel SS316	不锈钢Stainless steel SS304
7	止推垫圈Thrust washer	聚四氟乙烯PTFE	聚四氟乙烯PTFE
8	填料Packing	聚四氟乙烯PTFE	聚四氟乙烯PTFE
9	填料压盖螺母Glandnut	不锈钢Stainless steel SS304	不锈钢Stainless steel SS304
10	手柄Handle	不锈钢Stainless steel SS304	不锈钢Stainless steel SS304
11	垫圈Washer	不锈钢Stainless steel SS304	不锈钢Stainless steel SS304
12	阀杆螺母Stem nut	不锈钢Stainless steel SS304	不锈钢Stainless steel SS304
13	手柄套Handle sleeve	塑料Plastic	塑料Plastic

主要连接尺寸 Main dimensions

单位Unit：mm

SIZE	1/4"	3/8"	1/2"	3/4"	1"	11/4"	11/2"	2"	21/2"	3"	4"
D	11.6	12.7	15	20	25	32	38	50	65	80	100
L	54	54	62	71	86	100	107	125	150	174	214
H	50	50	60	64	71	78	86	95	130	148	180
E	100	1OO	130	130	165	165	190	190	250	250	280

注：二片式球阀连接形式另有对焊(BW)承插焊(SW)，并均可带国际ISO支架和锁定装置。
Note：two–blade ball valve has two connection ways of butt–welding(BW)and socket welding(SW)，and may be epuipped with,the bracket and lockdevice in conformity with ISO.

Whatsapp:+852-59345951 E-mail: info@valve-yz.com Skype: blue.sky1

YUzheng Valve Pipefitting Manufacturing 誉正阀门 www.valve-yz.com

3PC全通径1000PSI不锈钢ISO5211直装球阀



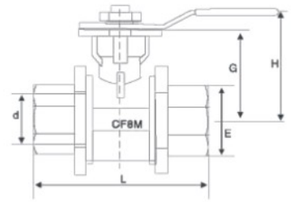

特点:
3PC结构设计
全通径
产品规格:1/2"–2"
工作压力:1000PSI
工作温度<150℃(PPL<300℃)
内螺纹端或承插焊端或对焊端
螺纹端可按BSPT、NPT、DIN2999制造
可选带锁手柄
配ISO5211直接驱动装置平台

Feature
3PC Body
Full Bore
Size: 1/2"–2"
Working Pressure: 1000PSI
Working Temperature<150℃(PPL<300℃)
Threaded End or SW or BW End
Threaded End:BSPT、NPT、DIN2999
Optional Locked device Handle
ISO5211 Direct Mounting Pad

材料列表Material List

NO	部件名称	Part Name	材料Material
1	阀体	Body	CF 8M
2	阀盖	Cap	
3	阀座	Seat	RPTFE
4	球	Ball	
5	密封垫	Gasket	PTFE
6	阀杆密封	Stem Seal	
7	阀杆	Stem	SS 316
8	防静电装置	Anti–Static Device	
9	阀杆填料	Stem Packing	PTFE
10	填料压盖	Packing Gland	
11	弹性垫圈	Spring Washer	SS 301
12	手柄	Handle	
13	螺母	Stem Nut	SS 304

尺寸列表Dimension List

NPS	d	E	G	H	W	L
1/2"	15	27	39	65	127	71
3/4"	20	33	45	76	131	79
1"	25	40	52	86	137	86
1–1/4"	32	49	58	90	165	107
1–1/2"	38	54	71	110	175	118
2"	50	67	79	125	183	138

Whatsapp:+852-59345951 E-mail: info@valve-yz.com Skype: blue.sky1

三片式内螺纹球阀3PC Thread ball valve



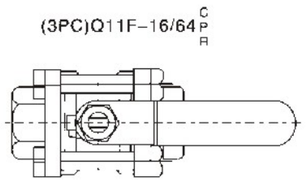

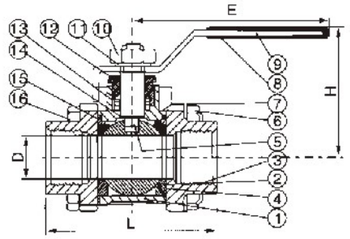

应用规范Application Norm

公称压力：1.6-6.4MPa
适用温度范围：-20～232℃～350℃
适用介质：水、油、气及某些腐蚀性液体(W、O、G)
承插焊标准：（SW）：GB12224・ANSIB16・25

Nominal pressuree:1.6-6.4MPa
Temperature Range:-20～232℃～350℃
Applying medium:water,oil,air and some Corrosive liquid(W、O、G)
Socket-welding standard:GB12224・ANSIB16・25



主要零件材料Main parts and materials

序号 Number	零件名称 Partname	材质 Materal	
		不锈钢 Stainless steel	碳钢 Carbon steel
1	阀体Valve Body	不锈钢Stainless steel CF8M	碳钢Carbon steel WCB
2	密封圈Joint ring	聚四氟乙烯PTFE	聚四氟乙烯PTFE
3	阀盖ValVe Cap	．不锈钢Stainless steel CF8M	碳钢Carbon steel WCB
4	球体Valve Ball	不锈钢Stainless steel SS304/SS316	不锈钢Stainless steel SS304/SS316
5	阀杆Valve Stem	不锈钢Stainless steel SS304/SS316	不锈钢Stainless steel SS304/SS316
6	螺母Nut	不锈钢Stainless steel SS304/SS316	FCD45
7	垫圈Washer	不锈钢Stainless steel SS304/SS316	FCD45
8	手柄套Handle sleeve	塑料Plastic	塑料Plastic
9	手柄Handle	不锈钢Stainless steel SS304/SS316	不锈钢Stainless steel SS304/SS316
10	阀杆螺母Stem nut	不锈钢Stainless steel SS304/SS316	B7
11	垫圈StemWasher	不锈钢Seainless steel SS304/SS316	不锈钢Stainless steel SS304/SS316
12	填料压盖螺母Gland nut	不锈钢Siainless steel SS304/SS316	FCD45
13	填料Packing	聚四氟乙烯PTFE	聚四氟乙烯PTFE
14	止推垫圈Thrust washer	聚四氟乙烯PTFE	聚四氟乙烯PTFE
15	填料Packing	聚四氟乙烯PTFE	聚四氟乙烯PTFE
16	螺栓Bolt	不锈钢Siainless steel SS304/SS316	B8

主要尺寸 Main dimensions

单位Unit:mm

SIZE	1/4	3/8	1/2	3/4	1	11/4	11/2	2	21/2	3	4
D	11.6	12.7	15	20	25	32	38	50	65	80	100
L	68	68	72	85	90	112	120	145	185	215	270
H	50	50	60	64	71	78	86	95	130	148	173
E	100	100	130	130	165	165	190	190	250	250	280
F	14.1	17.6	21.8	27.5	34.7	43.0	49.0	61.5	77.0	90.0	115.2
p	10	10	10	13	13	16	16	18	18	20	20

Whatsapp:+852-59345951 E-mail: info@valve-yz.com Skype: blue.sky1

YUzheng Valve Pipefitting Manufacturing 誉正阀门 www.valve-yz.com

三片式快装球阀3PC Clamp end ball valve



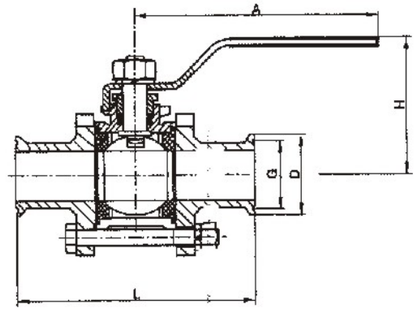

性能规范 Specifications

公称压力 Nominal pressure	PN	2.5,4.0,6.4	
强度试验压力 Strength testing pressure	PT	3.8,6.0,9.6	
低压密封试验压力 Strength testing pressure	0.6		
高压密封试验压力 Seal test preeure(high pressure)	3.0,4.8,7.6		
适用介质 Applicable medium	Q81F-(25~40~64)C,Q81F-(25~40~64)P,Q81F-(25~40~64)R		
	水、油品、气 Water、Oil、Gas	硝酸类 Nitric acid	醋酸类 Acetic acid
适用温度 Applicable temperature	-40~180℃		

材料列表 Materialliallist

零件名称 Description of parts	Q81F-25,40	Q81F-25,40	Q81F-25R,40R
阀体 Valve body	WCB	ZG1Cr18Ni9TiCF8	ZG1Cr18Ni12Mo2TiCF8M
球体 Ball	1Cr18Ni9Ti304	1Cr18Ni9Ti304	1Cr18Ni12Mo2T316
阀杆 Stem	1Cr18Ni9Ti304	1Cr18Ni9Ti304	1Cr18Ni12Mo2Ti316
密封圈 Seal ring	聚丙氟乙烯 Polytetrafluoroethlene		
填料 Packing	聚丙氟乙烯 Polytetrafluoroethlene		

尺寸列表 Dimension List

DN	G	D	L	H	A
15	1/2"	34	95	68	125
20	3/4"	50.5	105	70	125
25	1"	50.5	115	80	145
32	11/4"	50.5	125	84	145
40	11/2"	50.5	135	93	205
50	2"	64	150	100	205
65	21/2"	91	190	142	250
80	3"	106	220	155	250

Whatsapp:+852-59345951 E-mail: info@valve-yz.com Skype: blue.sky1

三片式法兰球阀3PC Flanged ball valve



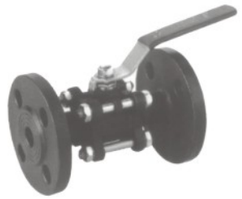

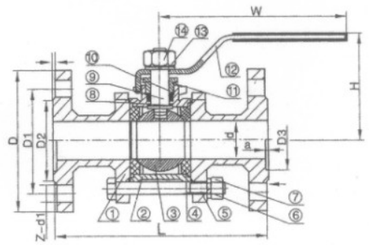

特点Feature

3PC结构设计
全通径
产品规格：DN15~1 00
工作压力：1.6/2.5/4.0/6.4Mpa
工作温度：<150℃(PPL<300℃)
法兰标准按GB,也可按美标
可选带锁手柄

3PC Body
Full Bore
Size：DN15～100
Working Pressure:1.6/2.5/4.0/6.4Mpa
Working Temperature：<1 50℃(PPL<300℃)
Flange Standard per GB 79 or ANSI B1 6.25
Optional Locked device Handle

材料列表 Materiallist

No	部件名称 Part Name	材料 Material	Q'TY
1	阀盖 Cap	CF8M	2
2	阀体 Body	CF8M	1
3	球 Ball	PTFE	1
4	阀座 Seat	SS316	2
5	螺柱 Bolt	SS304	4~8
6	垫圈 Washer	SS301	8~16
7	螺母 Nut	SS304	8~16
8	阀杆密封 Stem Seal	PTFE	1
9	阀杆 Stem	SS316	1
10	填料 Packing	PTFE	2~5
11	填料压盖 Packing Gland	SS304	1
12	手柄 Handle	SS304	1
13	垫圈 Washer	SS301	1
14	螺母 Stem Nut	SS304	1

尺寸列表 Dimension List

DN	d	L	H	D	D1	D2	F	PN4.0 a	PN4.0 D3	Z	d1	W
15	15	130	77	95	65	45	45	4	40	4	14	130
20	20	150	77	105	75	55	55	4	51	4	14	140
25	25	160	88	115	85	65	65	4	58	4	14	140
32	32	180	113	135	100	78	78	4	66	4	18	170
40	40	200	132	145	110	85	85	4	76	4	18	200
50	50	230	142	160	125	100	100	4	88	4	18	220
65	65	290	173	180	145	120	120	4	110	4/8	18	350
80	80	310	182	190	160	135	135	4	121	4/8	18	350
100	100	350	250	215/230	180/190	122/160	122/160	4.5	150	4/8	18/23	550

Whatsapp:+852-59345951 E-mail: info@valve-yz.com Skype: blue.sky1

YUzheng Valve Pipefitting Manufacturing 誉正阀门 www.valve-yz.com

3PC法兰球阀带平台 3PC Flanged ball valve With Pad

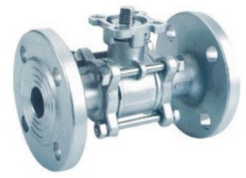

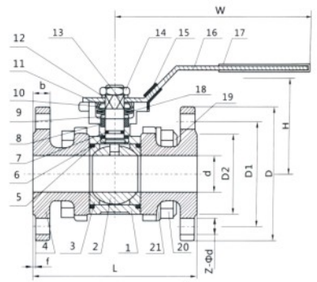

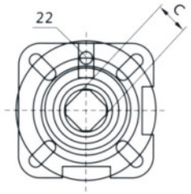

特点Feature

产品说明
・精密铸造阀体
・防脱出阀杆
・全通径设计
.直装平台设计
・带锁手柄可选配
・作压力:150LBIPNI6-PN40

标准
・设计标准:ASME 816.34
・防火设计:AP1607
・结构长度标准:ANSI日16.10/DIN PN16-40
・法兰标准:ASME 16.51DIN 2633-DIN 2635
・检测标准:AP—598

PRODUCT DESCRIPTIBN:
Investment Casting Body
Blow-Out Proof Stem
Fu—}Port
ISO 5211 Direct Mounting Pad
Locking Device Handle Available
Working Pressure:150LBIPNI6 Pn40

STANDARD:
Design Acc: ASME 816.34
Fire-Safety Design Available Acc: API 607
Face to F日ce AcC:ANS}日16.101DIN PN16-4D
Flange Acc: ASME 16.51DIN 2633-DIN 2635
Inspection&Testing Acc: API 598

材料列表 Materiallist

Item	Part 零配件		Material 材质		
1	Body	阀体	CF8M	CF8	WCB
2	Ball	球体	316	304	304
3	Ball Seat	阀座		PTFE/RPTFE	WCB
4	Cap	阀盖	CF8M	CF8	
5	Thrust Washer	止推垫片		PTFE	
6	Body Gasket	密封圈		PTFE	
7	O-Ring	O型圈	VITON		
8	Stem Packing	填料	PTFE		
9	Gland Nut	压盖	304		
10	Stop Nut	止动垫圈	304		
11	Nut	螺母	304		
12	Sping Washer	弹簧垫圈	304		
13	Stem	阀杆	316	304	304
14	Nut	螺母	304		
15	Locking Device	锁装置	301		
16	Handle	手柄	304		
17	Handle Cover	手柄套	Plastic		
18	Bellevelle Washer	蝶簧	301		
19	Bolt	螺栓	304		
20	Nut	螺母	304		
21	Sping Washer	弹簧垫圈	304		
22	Location Pin	定位插销	304		

尺寸列表 Dimension list

SIZE	1/2"	3/4"	1"	1-1/4"	1-1/2"	2"	2-1/2"	3"	4"
d	15	20	25	32	38	50	65	76	100
L	130	150	160	180	200	230	290	310	350
D	95	105	115	135	145	160	180	195	230
D1	65	75	85	100	110	125	145	160	190
D2	45	55	65	78	85	100	120	135	160
b	14	16	16	18	18	200	22	24	24
f	2	2	2	3	3	3	3	3	3
H	75	95	90	110	130	140	170	180	250
W	130	140	140	170	200	220	350	350	550
Z-ϕd	4-ϕ14	4-ϕ14	4-ϕ14	4-ϕ18	4-ϕ18	8-ϕ18	8-ϕ18	8-ϕ18	8-ϕ22

Whatsapp:+852-59345951 E-mail: info@valve-yz.com Skype: blue.sky1

3PC高平台内螺纹球阀 3PC Thread ball valve with ISO5211 pad



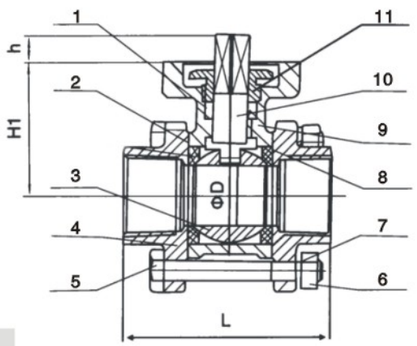

应用规范Application Norm

公称压力：1.6-6.4MPa
适用温度范围：-20～232℃～350℃
适用介质：水、油、气及某些腐蚀性液体(W、O、G)
承插焊标准：（SW）：GB12224・ANSIB16・25

Nominal pressuree:1.6-6.4MPa
Temperature Range:-20～232℃～350℃
Applying medium:water,oil,air and some CorrosiVe liquid(W、O、G)
Socket-welding stamdard:GB12224・ANSIB16・25

材料列表 Material list

ITEM	DESIGNATION	MATERIAL
1	阀杆填料 Stem packing	PTFE
2	阀座 Body seal	PTFE
3	球 Ball	CF8M
4	阀盖 Bonnet	304
5	螺栓 Bolt	304
6	螺栓 Bolt	304
7	弹性垫圈 Spring washer	304
8	止推垫圈 Thrust washer	PTFE
9	阀体 Body	CF8，CF8M
10	阀杆 Stem	304
11	压盖 Gland	304

尺寸列表 Dimension list

SIZE / ITEM	1/4"	3/8"	1/2"	3/4"	1"	11/4"	11/2"	2"	21/2"	3"	4"
D	12.5	12.5	15	20	25	32	38	50	65	76	94
L	64	64	65.5	77.5	83.5	104.5	110.5	129	170	186	220
H	68.4	68.4	72	78	90	95	107	122	155	164	170
W	135	135	135	135	152	152	188	188	233	233	233

Whatsapp:+852-59345951 E-mail: info@valve-yz.com Skype: blue.sky1

YUzheng Valve Pipefitting Manufacturing 誉正阀门 www.valve-yz.com

不锈钢三通球阀Stainless steel 3way ball valve



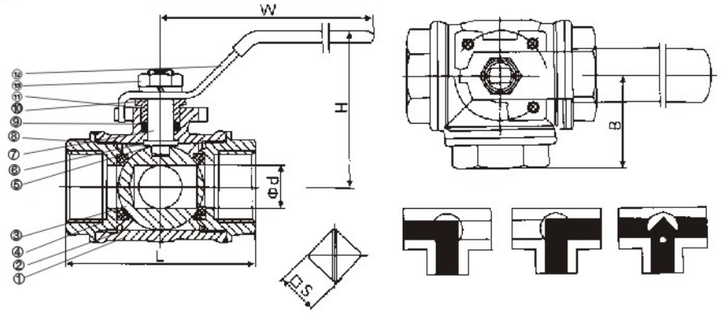

特点Feature

"L"型或"L"型结构
缩径
产品规格：1/4"~"2"
工作压力：1000PSI
螺纹端可按BSPT、NPT、DIN2999制造
ISO5211中平台
可选带锁手柄

"L"Type or"T"Type
Reduce Bore
Size：1/4"-2"
Working Pressure：1000PSI
Threaded end：BSPT、NPT、DIN2999
ISO5211 mouning pad
(Optional)Locking Device Handle

材料列表 Material list

NO	部件名称	Part Name	材料Material
1	阀体	Body	CF8M
2	阀盖	Bonnet	CF8M
3	阀座	Seat	PTFE
4	球	Ball	SS316
5	密封圈	Seal Ring	PTFE
6	阀杆密封	Stem Seal	PTFE
7	阀杆	Stem	SS316
8	防静电装置	Anti-Static Device	SS304
9	阀杆填料	Stem Packing	PTFE
10	填料压盖	Packing Gland	SS304
11	弹性垫圈	Spri ng Washer	SS304
12	手柄	Handle	SS304
13	螺母	Stem Nut	SS304

尺寸列表 Dimension list

NPS	ϕd	L	H	W	B	ISO5211	□S
1/4	4.2	64	32	85	32	F2	(7)
3/8	6	64	32	95	32	F2	(7)
1/2	10	68	34	108	34	F3	(9)
3/4	15	78	60	115	39	F3	(9)
1	18	86	60	135	43	F4	(9)
1-1/4	25	111	76	150	55.5	F4	(11)
1-2/2	32	126	85	175	63	F5	(11)
2	40	143	95	190	71.5	F5	(11)

Whatsapp:+852-59345951 E-mail: info@valve-yz.com Skype: blue.sky1

三片式不锈钢气动球阀3PC stainless steel pneumatic ball valve

规格Standard

设计制造：参数规范 ASME B16.34
检验测试：参照规格 API 598
DESIGN：ASME B16.34
TESTING：API598

连接端形式：牙口，NPT或BSPT/套连接对焊连接
ENDCONNECTION：THREADED(NPT,BSP, BSPT)/SOCKET WELD/BUTT WELD

温度范围:-29℃~230℃
TEMPERATURERATING：-29℃~+230℃

驱动方式:电动/气动
DRIVING:ELECTRIC/PNEUMATIC



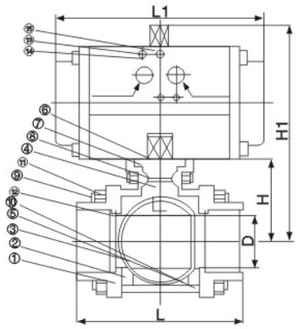

1000WOG

以R15(Vc值1.3)比例，作为参考
固有流量特性

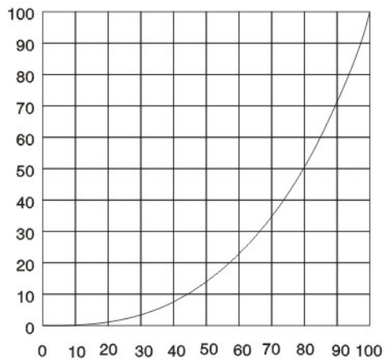

材料表Material list

NO	PART NAME 零件名称		SPECIFICATION 规格	
1	Body	本体	A351-CF8M	A351-CF8
2	Cap	阀盖	A351-CF8M	A351-CF8
3	Ball	球	A351-CF8M	A351-CF8
4	Stem	阀杆	SUS316	SUS304
5	Seat	阀座	PTFE/RTFE/TFM1600PEEK	
6	Gasket	线圈	PTFE	
7	Packing	填料	REINFORCED/FTFE	
8	O Ring	O型圈	VTTON	
9	Disc spring	碟簧	SUS301	
10	Bolt	连接螺栓	ASTM A193-E8	
11	Nut	螺帽	ASTM A194-8	
12	Bolt washer	垫片	SUS304	
13	Bolt	连接螺栓	ASTM A193-E8	
14	Bolt nut	螺母	ASTM A194-8	
15	Pneumatic	气动执行器	-	

SIZE	D	L	L1	H	H1	ISO5211
R1/2"	R15	75	137	36.5	125.5	F03/F04
1/2"	16.0	75	137	36.5	125.5	F03/F04
3/4"	20.0	80	137	39.5	128.5	F03/F04
1"	25.0	90	137	47.5	136.5	F03/F04
1-1/4"	32.0	110	137	53.5	142.0	F03/F04
1-1/2"	38.1	120	154	61.5	166.5	F05
2"	50.8	140	154	70.5	175.5	F06

Whatsapp:+852-59345951 E-mail: info@valve-yz.com Skype: blue.sky1

YUzheng Valve Pipefitting Manufacturing 誉正阀门 www.valve-yz.com

气动、电动、法兰球阀Pneumatic/Electric actuator/Flanged ball valve



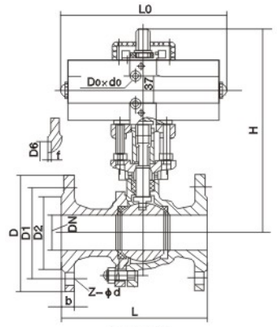

气动球阀



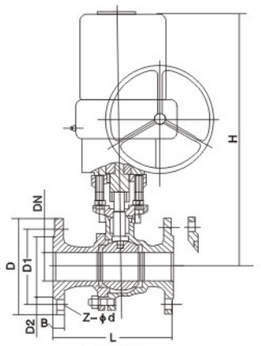

电动球阀

主要性能规范Main property and specifiecation

型号 Type	公称压力 PN/MPa Nominalpressure	试验压力/MPaTest pressure			适用温度℃ Applicable temperature	适用介质 Applicable medium
		壳体 Shell	液体密封 Liquid seal	气体密封 Gas seal		
Q641F-25	2.5	3.75	2.75	0.6	≤150	水、蒸汽、油品等 Water steam coalgas oil
Q641F-25P						弱腐蚀性材质 Weak corrosivity material
Q641F-25R						腐蚀性介质 Etccorrosive medium

主要零件材料 Main parts material

型号 Type	零件名称 Part name			
	阀体 Body	球体、阀杆 Ball stem	密封圈 Seal ring	填料 Packing
Q641F-25	碳素钢铸件或锻件 Carbon steel casting	2GrL3	增强聚四氟乙烯 R PTFE	聚四氟乙烯 PTFE
Q641F-25P	铬镍钛不锈钢铸件或锻件 Cr Ni Tistainless steel casting	铬镍钛不锈钢 Cr Ni Tistainless steel		
Q641F-25R	铬镍钼钛不锈钢铸件或锻件 Cr Ni Mo Tistainless steel casting	铬镍钼钛不锈钢 Cr Ni Mo Tistainless steel		

主要尺寸及数量 Main dimensions

公称通径DN/mm Nominal diameter	尺寸/mmDimensions							气动装置型号 Pneumatic actuator type	电动装置型号 Elecric actuator type
	L	D	D1	D2	b	Z-φd	H		
15	130	95	65	45	16	4-φ14	225	QGSY50	CH05
20	140	105	75	55	16	4-φ14	227	QGSY50	CH05
25	150	115	85	65	16	4-φ14	233	QGSY50	CH05
32	165	135	100	78	18	4-φ18	259	QGSY65	CH10
40	180	145	110	85	18	4-φ18	267	QGSY65	CH10
50	200	160	125	100	20	4-φ18	278	QGSY65	CH10
65	220	180	145	120	22	8-φ18	363	QGSY80	CH10
80	250	195	160	135	22	8-φ18	383	QGSY105	CH20
100	280	230	190	160	24	8-φ23	552	QGSY105	CH20
125	320	270	220	188	28	8-φ25	576	QGSY125	CH40
150	360	300	250	218	30	8-φ25	604	QGSY160	CH60

Whatsapp:+852-59345951 E-mail: info@valve-yz.com Skype: blue.sky1

立式止回阀 Vertical cheek valve



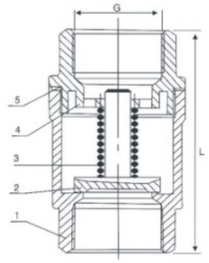

性能规范

>制造与验收按GB/T12224-1989的规定
>其它技术要求按JB2887-81的规定
>阀门检查和试验GB/T13927-92的规定

Specifications

>Making and confirming according to the regulation of GB/T12224-1989;
>Other technical requirements,according to the regulation of JB2887-81;
>The valve is checked and tested according to the regulation of GB/T13927-92.

No	部件名称 Part Name	H14/15-(16-64)C	H14/15F-(16-64)P	H14/15F-(16-64)R
1	阀体 Body	WCB	ZG1Cr18Ni9TI CF8	ZG1Cr18Ni12Mo2Ti CF8
2	阀盖 Bonnet	WCB	ZG1Cr18Ni9TI CF8	ZG1Cr18Ni9Ti CF8
3	阀瓣 Disc	2G1Cr18Ni9Ti	ZG1Cr18Ni9TI CF8	ZG1Cr18Ni9Ti CF8
4	密封圈 Seal gasket	304、316、PTFE		
5	填料 Packing	聚四氟乙烯Polytetraflurethylene(PTFE)		

主要连接尺寸 Main dimensions

公称通径DN	G	L
15	1/2"	68
20	3/4"	78
25	1"	89
32	1-1/4"	100
40	1-1/2"	106
50	2"	121

Whatsapp:+852-59345951 E-mail: info@valve-yz.com Skype: blue.sky1

Whatsapp:+852-59345951 E-mail: info@valve-yz.com Skype: blue.sky1

不锈钢内螺纹止回阀 Stainless steel thread swing check valve



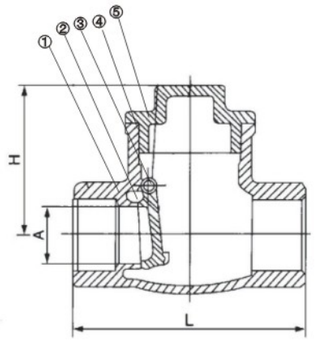

应用规范Application Norm

公称压力：2.5MPa
适用温度范围：-20～232℃～350℃
适用介质：水、油、气及某些腐蚀性液体(W、O、G)
螺纹类型：G・NPT.BSPT.BSP.DIN259/2999

Nominal pressuree:2.5MPa
Temperature Range:-20～232℃～350℃
Applying medium:water,oil,air and some Corrosive liquid(W、O、G)
Thread type:G・NPT. BSPT.BSP.DIN259/2999

主要零件材料Main parts and materials

序号Number	零件名称 Part name	材质 Material
1	阀体ValVe Body	不锈钢Stainless steel CF8M/CF8
2	阀瓣Valve Disc	不锈钢Stainless steel CF8M/CF8
3	摇杆插销Rocker socket	不锈钢Stainless steel SS31 6/304
4	密封圈 Seal Ring	不锈钢Stainless steel CF8M/CF8
5	阀盖Valve Cap	不锈钢Stainless steel SS316/304

主要连接尺寸及重量 Main dimensions and weights

单位Unit：mm

NPS	d	L	H
1/4"	6	58	36
3/8"	10	58	36
1/2"	15	66	40
3/4"	20	80	54
1"	25	90	59
1-1/4"	32	105	62.5
1-1/4"	38	120	73
2"	50	140	85

Whatsapp:+852-59345951 E-mail: info@valve-yz.com Skype: blue.sky1

YUzheng Valve Pipefitting Manufacturing 誉正阀门 www.valve-yz.com

H71W对夹式止回阀 H71W Disc Type Wafer Check Valve



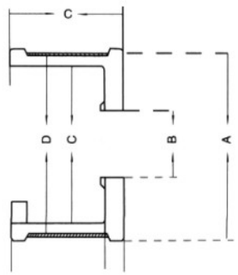

本阀门由于阀体、阀瓣、阀盖等组成。阀瓣在液压的作用下打开。并限制在阀盖的凸台上，流体经阀瓣外边通过。当出口压力大于进口压力时，阀瓣就在液压力和弹簧力的作用下关闭制止了流体的返流。

This valve as a result of composition and so on valve body, valve petal, valve cover. The valve petal opens under the hydraulic pressure function, and limits on valve cover raised, the fluid passes after the valve petal outside. When the outlet pressure is bigger than the inlet pressure, the valve petal on closed in the hydraulic pressure and under thespring strength function stops the fluid to return flows.

性能参数 Function parameter

公称压力Pg(Kgf/cm²) Nominal pressure		40	工作温度℃ Operating temperature	
试验压力Ps(Kgf/cm²) Test pressure	密封 Seal	40		常温
	强度 Intensity	60		
工作压力Ps(Kgf/cm²) Working pressure		40		≤250
适用介质 suitable the medium		硝酸等腐蚀性介质 Corrosiveness and so on nitric acid lies between stores		

主要尺寸 Main Dimensions

口径Caliber	A	B	C
15	52	15	31
20	60	20	31
25	70	25	31
32	80	32	34
40	90	40	35
50	105	50	40
65	127	65	50
80	140	80	60
100	160	100	75
125	190	125	83
150	220	150	98
200	280	200	110
250	340	250	
300	400	300	
350	455	350	
400	510	400	

Whatsapp:+852-59345951 E-mail: info@valve-yz.com Skype: blue.sky1

Y型内螺纹过滤器Y Type thread strainer



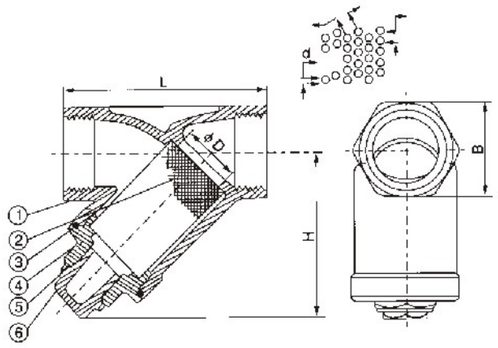

应用规范Application Norm

公称压力：600~800PSI
适用温度范围：-20~232℃
适用介质：水、油、气及某些腐蚀性液体(W、O、G)
螺纹类型：G·NPT.BSPT.BSP.DIN259/2999

Nominal pressuree:600~800PSI
Temperature Range:-20~232℃
Applying medium:water,oil,air and some Corrosive liquid(W、O、G)
Thread type:G·NPT. BSPT.BSP.DIN259/2999

主要零件材料Main parts and materials

序号 Number	零件名称 Part name	材质 Material
1	阀体Valve Body	不锈钢Stainless steel CF8/CF8M
2	滤网Screen	不锈钢Stainless steel Ss304
3	垫片Gasket	聚四氟乙烯PTFE
4	阀盖Valve Cap	不锈钢Stainless steel CF8/CF8M
5	垫片Gasket	聚四氟乙烯PTFE
6	逆止盖Check cap	不锈钢Stainless steel CF8/CF8M

主要连接尺寸及重量 Main dimensions and weights

单位Unit：mm

SIZE	1¹/4"	3/8"	1/2"	3/4"	1"	11/4"	11/2"	2"
D	10	12	15	20	25	32	40	50
B	24	24	26	33	41	49	56	69
H	51	51	51	60	72	77	87	103
L	65	65	65	80	90	105	120	140
重量WT(G)	290	290	300	500	750	1000	1300	

Whatsapp:+852-59345951 E-mail: info@valve-yz.com Skype: blue.sky1

YUzheng Valve Pipefitting Manufacturing 誉正阀门 www.valve-yz.com

不锈钢内螺纹闸阀Stainless steel thread gate valve



Z11W-25P

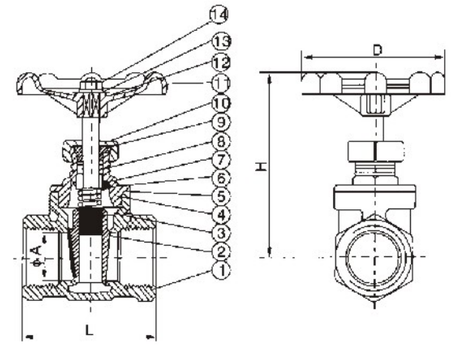

应用规范Application Norm

公称压力：2.5MPa
适用温度范围：-20~232℃~350℃
适用介质：水、油、气及某些腐蚀性液体(W、O、G)
螺纹类型：G·NPT.BSPT.BSP.DIN259/2999

Nominal pressuree:2.5MPa
Temperature Range:-20~232℃~350℃
Applying medium:water,oil,air and some CorrosiVe liquid(W、O、G)
Th read type:G·NPT. BSPT.BSP.DIN259/2999

主要零件材料Main parts and materials

序号Number	零件名称 Part name	材质 Material
1	阀体Valve Body	不锈钢Stainless steel CF8M/CF8
2	闸板Disc	不锈钢Stainless steel CF8M/CF8
3	阀杆Valve Stem	不锈钢Stainless steel SS316/304
4	阀盖Valve Cap	不锈钢Stainless steel CF8M/CF8
5	填料Packing	聚四氟乙烯PTFE
6	止推垫片Stop ring	不锈钢Stainless steel SS304
7	阀杆架Valve stem holder	不锈钢Stainless steel SS316/304
8	填料Packing	聚四氟乙烯PTFE
9	螺母Nut	不锈钢Stainless steel SS304
10	填料压盖螺母Gland nut	不锈钢Stainless steel SS3 16/304
11	手轮Hand wheel	铝合金Mico steel
12	铭牌Name plate	铝Aluminum
13	手轮垫片Hand wheel washer	不锈钢Stainless steel SS304
14	手轮螺母Hand wheel nut	不锈钢Stainless steel SS304

主要连接尺寸 Main dimensions

单位Unit：mm

SIZE	1/2"	3/4"	1"	11/4"	11/2"	2"
A	15	20	25	32	38	50
H	90	97	108	120	146	163
L	55	60	65	75	85	95
D	70	70	80	80	90	100

Whatsapp:+852-59345951 E-mail: info@valve-yz.com Skype: blue.sky1

内螺纹截止阀Thread globe valve



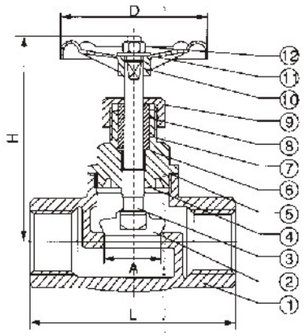

美式American style
J11w-16 $\frac{P}{R}$ 200WOG

应用规范 Application Norm

公称压力：2.5Pa
适用温度范围：-20~232℃~350℃
适用介质：水、油、气及某些腐蚀性液体（W、O、G）
螺纹类型：G·NPT.BSPT.BSP.DIN259/2999

Normal pressure:2.5MPa
Temperature Range:-20~232℃~350℃
Applying medium:water,oil,air and some Corrosive liquid（W、O、G）
Thread type:G·NPT.BSPT.BSP.DIN259/2999

主要零件材料Main parts and materials

序号Number	零件名称 Part name	材质 Material
1	阀体 Valve Body	不锈钢 Stainless steel CF8/CF8M
2	阀瓣 Valve Disc	不锈钢 Stainless steel SS304/316
3	阀杆 Valve Stem	不锈钢 Stainless steel SS316
4	阀盖 Valve Cap	不锈钢 Stainless steel CF8/CF8M
5	密封垫 Joint Gasket	聚四氟乙烯PTFE
6	平垫washer	不锈钢 Stainless steel SS304/316
7	填料 Packing	聚四氟乙烯PTFE
8	压环 Clamping ring	不锈钢 Stainless steel SS304/316
9	压盖 Gland	不锈钢 Stainless steel CF8/CF8M
10	手轮 Hand wheel	HT(C.R)
11	铭牌Name plate	ALUMINUM ALLOY
12	螺母 Nut	不锈钢 Stainless steel SS304

主要连接尺寸及重量 Main dimensions and weights 单位：mm Unit:mm

SIZE	1/4″	3/8″	1/2″	3/4″	1″	11/4″	11/2″	2″
A	10	12	15	20	25	32	40	50
D	70	70	70	70	80	90	90	100
L	65	65	65	80	90	105	120	140
H	85	85	85	95	105	125	135	155
重量WT（G）	340	340	350	550	870	136	1860	2670

Whatsapp:+852-59345951 E-mail: info@valve-yz.com Skype: blue.sky1

YUzheng Valve Pipefitting Manufacturing 誉正阀门 www.valve-yz.com

螺纹式气动角座阀Thread pneumatic angle seat valve

选取Select

控制功能：常开
PPS执行机构外壳适用于环境温度+5℃～+130℃
无复位弹簧 双作用执行机构
三夹式连接
独立可调行程极限，适于高低流量
手动应急开关
function:normally open
pps body actuator suitable for temperature of:+5℃~+130℃
Bon-return spring double acting actuator
3 clamp connection
Adjustable traveling postionfor high or low flow rate
manual switch for urgent



接口Size (英寸)(in)	内孔 inside bore	KV值 KV value	最大工作压力 Max working pressure(mpa)	要求最小控制压力 Min.required control pressure(bar)	执行机构尺寸 Actuator size(Φmm)	流向 Flow direction	控制功能 Control fuction
G3/8"	13	3.7	0～16	4～7	40	阀座上方 On upper seat	
G1/2"	15	4.2	0～16	4～7	50	阀座上方 On upper seat	
G3/4"	20	8.	0～16	4～7	50	阀座上方 On upper seat	
G 1"	25	19	0～16	4～7	63	阀座上方 On upper seat	
G1 1/4"	32	27.5	0～16	4～7	63	阀座上方 On upper seat	
G1 1/2"	40	42	0～16	4～7	63	阀座上方 On upper seat	
G 2"	50	52	0～16	4～7	80	阀座上方 On upper seat	
G/2"	65	77	0～16	4～7	80	阀座上方 On upper seat	

订购气动阀门产品须知Notice for place order

1、请在订货时提供详细的口径、规格、交货地址、时间。
2、根据管道需要，决定选用往复式(二位开关式)或弹簧复位式(常闭或常开式)。
3、可选配控制附件：(1)单电控电磁阀(断电时常闭或常开)，(2)双电控电磁阀(开关式)，(3)阀位开关回讯器，(4)气源处理三联件。
特殊使用环境(易燃易爆场合)，可选防爆型。

1、please offer detail size,specification,delivery address and time
2、please slect returnable or spring-returnable for open and close
3、selectable spares:(1)solo-magnatic valve.(2)double maganetic valve (3)valve position feedbacker.(4)pneumatic equipment.may select anti-explosive type for special Condition

接口 size	内孔 Inside Bore	执行机构尺寸 Actuator size(Φmm)	A	B	C	E	F	H	A/F
G1/2"	15	50	85	173	13	64	44	137	27
G3/4"	20	50	95	178	14	64	44	145	32
G/1"	25	63	105	200	18	80	52	173	41
G11/4"	32	63	120	225	19	80	52	210	50
G11/2"	40	63	130	235	19	80	52	245	55
G /2"	50	80	150	290	23	101	61	301	70
G/2"	65	80	185	315	30	101	61	315	70

Whatsapp:+852-59345951 E-mail: info@valve-yz.com Skype: blue.sky1

快装式气动角座阀Clamp end pneumatic angle seat valve

外部先进导角座阀，溢流口与滑块间有自调节密封压盖，阀体角座结构可实现较大流量，特别是与普通截止相比时。

Self-adjusting stem seals.high flow rate.low fluid resistance.no water-hammer.



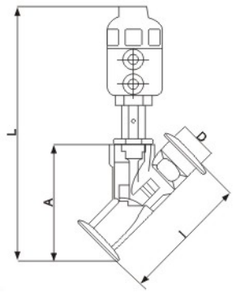

技术参数Specification:

压力范围：0-16bar
介质温度：-10℃-+180℃
环境温度：-10℃-+60℃
阀体材料：不锈钢
密封材料：聚四氟乙烯
执行机构外壳：聚酰胺
控制气体：中性气体，空气

Control type:0-16bar
Flow temperature:-10℃-+180℃
Ambient temperature:-10℃-+60℃
Body material:stainless steel
Seat:teflon(PTFE)
Actuator:Aluminium alloy
Actuator pneumatic:Air or others

选取Select

PPS执行机构外壳造用于环境温度+5℃~+130℃
无复位弹簧 双作用执机构
三夹式连接
电子式位置反馈
立可调行程极限，适于高低流量
手动应急开关
先导阀适用的Namur适配器

PPS body actuator suitable for trmp of+5℃~+130℃
Non-return spring double acting actuator
3 clamp connection
Electric position feedback
Ajustable traveling postion for high or low flow rate
Manual switch for urgent
valve suitable for Namur equipment

外形尺寸External dimensions

接口 Size	内孔 Inside Bore	外形连接尺寸Outside dimension				最大工作压力 Max.working pressure	气源压力 Pneumatic Pressure	执行器规格 Actuator spec
		A	D	B	H			
G1/2	15	108	34	98	160	1.6	0.4-0.7	ϕ50
G3/2	20	118	50.5	108	170			ϕ63
G1	25	127	50.5	117	195			ϕ63
G11/4	32	148	50.5	138	255			ϕ80
G11/2	40	159	50.5	149	304			ϕ80
G2	50	191	64	181	380			ϕ100
G21/2								ϕ100
G3								

参数Specification

接口Size (英寸)(in)	内孔 inside bore	KV值 KV value (m^3/h)	最大工作压力 Max working pressure(bar)		要求最小控制压力 Min.required control pressure(bar)	执行机构尺寸 Actuator size(Φmm)		流向 Flow direction	控制功能 Control fuction
			螺纹thread	焊接weld		螺纹thread	焊接weld		
G3/8	13.0	3.7	15.0	–	4.0	40	–	阀座下方 On downer seat	
G1/2	13.0	4.2	16.0	16.0	3.9	50	50	阀座下方 On downer seat	
G3/4	20.0	8.0	11.0	11.0	3.9	50	50	阀座下方 On downer seat	
G1	25.0	19.0	11.0	11.0	4.2	63	63	阀座下方 On downer seat	
G11/2	32.0	27.5	15.0	15.0	5.0	80	80	阀座下方 On downer seat	
G11/2	40.0	42.0	12.5	10.0	4.4	100	80	阀座下方 On downer seat	
G2	50.0	55.0	10.0	7.2	3.2	125	100	阀座下方 On downer seat	
G21/2	65.0	90.0	5.2	–	3.2	125	–	阀座下方 On downer seat	

Whatsapp:+852-59345951 E-mail: info@valve-yz.com Skype: blue.sky1

YUzheng Valve Pipefitting Manufacturing 誉正阀门 www.valve-yz.com

法兰式气动角座阀Flanged pneumatic angle seat valve

外部先进导角座阀，溢流口与滑块间有自调节密封压盖，阀体角座结构可实现较大流量，特别是与普通截止相比时。

Self-adjusting stem seals.high flow rate. low fluid resistance.no water-hammer.



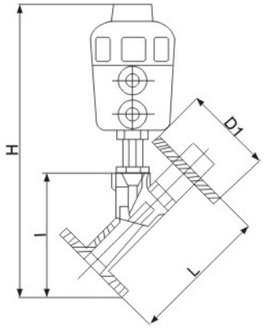

技术参数Specification:

压力范围：0-16bar
介质温度：-10℃-+180℃
环境温度：-10℃-+60℃
阀体材料：不锈钢
密封材料：聚四氟乙烯
执行机构外壳：聚酰胺
控制气体：中性气体，空气

Control type:0-16bar
Flow temperature:-10℃-+180℃
Ambient temperature:-10℃-+60℃
Body material:stainless steel
Seat:teflon(PTFE)
Actuator:Aluminium alloy
Actuator pneumatic:Air or others

选取Select

PPS执行机构外壳造用于环境温度+50℃~+130℃
无复位弹簧 双作用执机构
三夹式连接
电子式位置反馈
立可调行程极限，适于高低流量
手动应急开关
先导阀适用的Namur适配器

PPS body actuator suitable for temp.of +50℃~+130℃
Non-return spring double acting actuator
3 clamp connection
Electric position feedback
Ajustable traveling postion for high or low flow rate
Manual switch for urgent
valve suitable for Namur equipment

外形尺寸External dimensions

接口 size	内孔 Inside Bore	外形连接尺寸Outside dimension				最大工作压力 Max.working pressure	气源压力 Pneumatic pressure	执行器规格 Actuator spec
		A	D	B	H			
G1/2	15	130	110	135	150	1.6	0.4-0.7	ϕ50
G3/2	20	130	115	135	150			ϕ50
G1	25	140	125	135	185			ϕ63
G11/4	32	150	135	.135	255			ϕ80
G11/2	40	180	145	170	340			ϕ80
G2	50	195	160	180	380			ϕ80
G21/2	55	256	180	190	.450			ϕ100
G3	80	270	195	230	480			ϕ125

参数Specification

接口Size (英寸)(in)	内孔 inside bore	KV值 KV value	最大工作压力 Max working pressure(bar)		要求最小控制压力 Min.required control pressure(bar)	执行机构尺寸 Actuator size(Φmm)		流向 Flow direction	控制功能 Control fuction
			螺纹thread	焊接weld		螺纹thread	焊接weld		
G3/8	10.0	3.7	15.0	–	4.0	40	–	阀座上方 On upper seat	
G1/2	15.0	4.2	16.0	16.0	3.9	50	50	阀座上方 On upper seat	
G3/4	20.0	8.0	11.0	11.0	3.9	50	50	阀座上方 On upper seat	
G1	25.0	19.0	11.0	11.0	4.2	63	63	阀座上方 On upper seat	
G11/2	32.0	27.5	15.0	15.0	5.0	63	80	阀座上方 On upper seat	
G11/2	40.0	42.0	12.5	10.0	4.4	80	80	阀座上方 On upper seat	
G2	50.0	55.0	10.0	7.2	3.2	80	80	阀座上方 On upper seat	
G21/2	65.0	90.0	5.2	–	3.2	100	–	阀座上方 On upper seat	

Whatsapp:+852-59345951 E-mail: info@valve-yz.com Skype: blue.sky1

全不锈钢螺纹气动角座阀 Stainless steel thread pneumatic angle seat valve



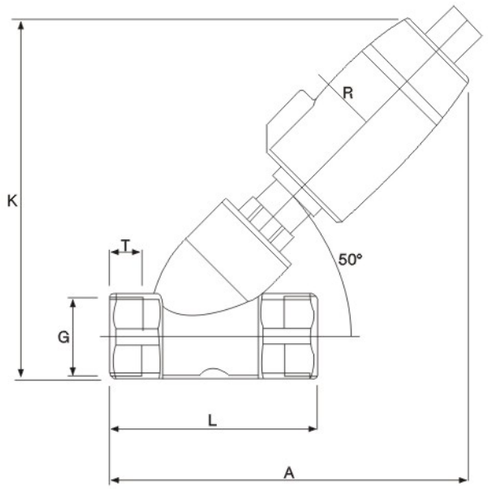

技术参数Technical specification

阀门功能：常闭·常开
工作压力：3kgf/cm2
控制压力：4-6kgf/Cm2
介质温度：-10℃-+80℃
环境温度：-10℃-+60℃
适用介质：中性气体和液体
气控接口：G1/8

阀体材料：不锈 钢/青铜
密封材料：聚四氟乙烯/氟橡胶
阀杆材料：不锈钢

Valve Function：Normally Close · Normally open
Workinl pressure：3kgf/cm²
Control pressu re：4-6kgf/CM²
Medium temperature：-10℃-+80℃
Environment temperature:-10℃-+60℃
Applied medium：neutral gaS and liquid
Pneumat-ic ioint：G1/8

Valve body material:SS316/Bronze
Seal material:PTFE/FPM
Valve stem material:S.S316

尺寸 Dimension

规格 Size	A	G	K	L	R	T	订货号 Order number
DN15	113	ZGL/2"	120	70	27	15	BTB714003-15
DN20	120	ZG3/4"	130	80	27	17	BTB714003-20
DN25	135	ZGL"	140	90	27	17	BTB714003-25
DN32	180	ZGL1-4"	180	115	35	20	BTB714005-32
DN40	180	ZGL1-2"	182	115	35	16	BTB714005-40
DN50	190	ZG2"	200	138	35	20	BTB714005-50

Whatsapp:+852-59345951 E-mail: info@valve-yz.com Skype: blue.sky1



Whatsapp:+852-59345951 E-mail: info@valve-yz.com Skype: blue.sky1

一体式法兰球阀Single body flanged ball valve



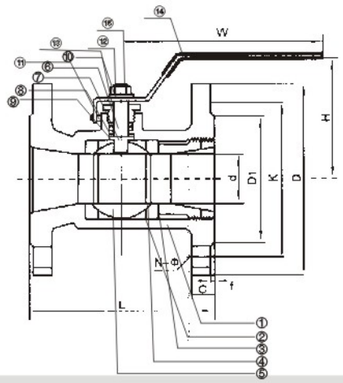

特点Feature

工作压力：1.6MPa、2.5MPa、4.0MPa、6.4MPa
产品规格：1/2"–10"
工作温度：<1 80℃(PPL<300℃
适用介质：油、水、气、油品、酸等介质
可根据需要设计防火静电结构
法兰标准按：GB79
结构长度按：GB79
测试和检验按：GB79

Working pressure：1.6MPa、2.5MPa、4.0MPa、6.4MPa
Size：1/2"~10"
Working Temperature：<180℃(PPL<300℃
Applicable Media：
Water,Gas,Oil.Nitric acid,acetic acid etc
Fire–safe and Anti–Static device available
Flange Standard：GB79
Face to Face：GB79
Check and Test：GB79

材料列表 Materiallist

NO	部件名称	Part Name	材料MATRERIAL	Q'TY
1	体	Body	CF8M WCB	1
2	阀座	Seat	PTFE	2
3	阀盖	Bonnet	CF8M WCB	1
4	密封垫	Seal gasket	PTFE/GRAPHITE	1
5	球	Ball	SS316	1
6	阀杆	Stem	SS316	1
7	阀杆密封	Stem seal	PTFE	1
8	填料	Packing	PTFE/GRAPHITE	2
9	填料压套	Packing gland	SS316	1
10	填料压盖	Packing gland	CF8M WCB	1
11	定位销	Stop pin	SS304	1
12	压盖螺栓	Gland bolt	SS304	1
13	挡圈	Snap ring	65MN	2
14	手柄	Handle	KT33–8	1
15	螺钉	Set bolt	SS304	1

尺寸列表 Dimension list

NPS	1.6MPa、2.5MPa、4.0MPa、6.4MPa									
	d	L	D	K	D1	C	f	H	N–ϕ	W
1/2	12	90	95	65	46	14	2	60	4–14	110
3/4	15	105	105	75	56	14	2	65	4–14	120
1	20	110	115	85	65	15	2	75	4–14	150
1–1/4	25	125	135	100	76	16	3	83	4–18	160
1–1/2	32	136	145	110	85	18	3	90	4–18	160
2	38	155	160	125	100	18	3	100	4–18	180
2–1/2	50	170	180	145	118	20	3	110	4–18	200
3	65	200	195	160	132	20	3	130	8–18	250
4	80	230	215	180	150	22	3	150	8–18	270
5	76	254	255	216	186	24	3	185	8–22	300
6	102	267	279	241.5	216	26	3	209	8–22	320
8	152	292	345	298.5	270	29	3	250	8–22	350
10	203	330	406	362	324	31	3	345	12–26	400

Whatsapp:+852-59345951 E-mail: info@valve-yz.com Skype: blue.sky1

YUzheng Valve Pipefitting Manufacturing 誉正阀门 www.valve-yz.com

意大利超薄型球阀 Italy wafer type ball valve



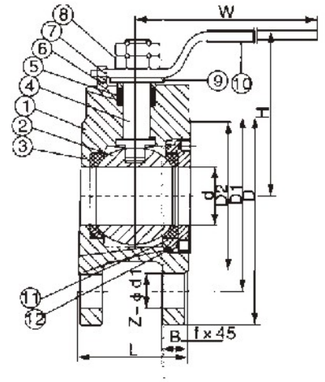

$Q\frac{4}{7}1F-16/25P\frac{C}{R}$

应用规范Application Norm

公称压力：1.6–2.5MPa
适用温度范围：–20～232℃～350℃
适用介质：水、油、气及某些腐蚀性液体(W、O、G)

Nominal pressuree:1.6–2.5MPa
Temperature Range:–20～232℃～350℃
Applying medium:water,oil,air and some Corrosive liquid(W、O、G)

主要零件材料Main parts and materials

序号Number	零件名称 Part name	材质 Material	
1	阀体Valve Body	不锈钢Stainless steel CF8M/CF8	碳钢Carbon WCB
2	球Ball	不锈钢Stainless steel SS316/304	不锈钢Stainless steel SS304
3	密封垫Gasket	聚四氟乙烯PTFE	聚四氟乙烯PTFE
4	阀杆Valve Stem	不锈钢Stainless steel SS316/304	不锈钢Stainless steel SS304
5	填料Packing	聚四氟乙烯PTFE	聚四氟乙烯PTFE
6	定位锁Locating lock	不锈钢Stainless steel SS304	不锈钢Stainless steel SS304
7	手柄Handle	不锈钢Stainless steel SS304	不锈钢Stainless steel SS304
8	阀杆螺母Stem nut	不锈钢Stainless steel SS304	不锈钢Stainless steel SS304
9	填料压盖Packing gland	不锈钢Stainless steel SS304	不锈钢Stainless steel SS304
10	手柄套Handle sleeve	塑料Plastic	塑料Plastic
11	密封并帽Seal capsule	不锈钢Stainless steel SS316/304	不锈钢Stainless steel SS304
12	垫圈Washer	聚四氟乙烯PTFE	聚四氟乙烯PTFE

主要连接尺寸 Main dimensions

单位Unit：mm

SIZE	1/ 2"	3/ 4"	1"	11/4"	11/2"	2"	21/2"	3"	4"	5"	6"	8"
d	15	19	23.5	30	36	45	58	67	76	100	125	195
L	32	38.5	45	55	65	72	95	120	145	200	255	275
D	95	105	115	135	145	160	180	195	215	245	280	335
D1	65	75	85	100	110	125	145	160	180	210	240	295
D2	45	55	65	78	85	100	120	135	155	185	210	265
H	62	70	79	86	92	102	158	172	187	200	240	278
E	110	125	135	150	150	180	250	300	350	650	840	1000
b	14	14	16	16	18	20	22	24	24	26	26	28
Z–d1	4–14	4–14	4–14	4–18	4–18	4–18	4–18	8–18	8–18	8–18	8–23	12–20
F	2	2	2	3	3	3	3	3	3	3	3	3

Whatsapp:+852-59345951 E-mail: info@valve-yz.com Skype: blue.sky1

不锈钢二片法兰球阀2PC Flanged ball valve(GB)



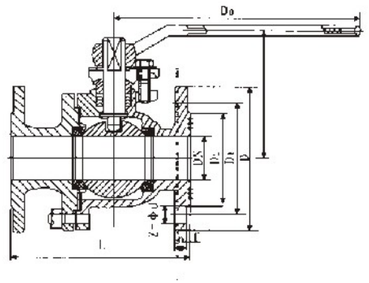

性能范围 Specifications

型号 Type	公称压力 Nominal Pressure	试验压力 Test Pressure 强度（水）Mpa	密封（水）空气Mpa	低压密封 空气Mpa	工作温度(℃) Working Temperature	适用介质 Suitable Medium
Q41F-16P(R)	1.6	2.4	1.8	0.6	≤150	NITRIC ACID 硝酸类
Q41F-25P(R)	2.5	3.8	2.8	0.6	≤150	NITRIC ACID 硝酸类
Q41F-40P(R)	4.0	6.0	4.4	0.6	≤150	NITRIC ACID 硝酸类

主要零件材料 Material for main parts

零件名称 Part name	材料 Material Q41F-16P -25P -40R	Q41F-16P -25P -40R
阀体 Body	铬镍钛钢 Cl Ni Ti	铬镍钼钛钢 Cl Ni Mo Ti steel
球体 Ball		
阀杆 Stem		
密封圈 Sealgasket	聚四乙烯 Polyter afuoroethyenea	
扳手 Hand wheel	铸钢 Carbon teel	

主要连接尺寸和外形尺寸 Main connecting and over dimensions

型号 Type	公称通径 DN Nominal Diameter	尺寸（mm） Dimensions L	D	D1	D2	H	B-f	B-f	D0
Q41F-16P(R)	15	130	95	65	45	60	14-2	14-2	108
	20	140	105	75	55	64	14-2	14-2	120
	25	150	115	85	65	90	16-2	16-2	165
	32	165	135	100	78	105	16-2	16-2	180
	40	180	145	110	85	150	16-3	16-3	240
	50	200	160	125	100	190	16-3	16-3	240
	65	220	180	145	120	195	18-3	18-3	320
	80	250	195	160	135	215	20-3	20-3	350
	100	280	215	180	155	250	20-3	20-3	400
	125	320	245	210	185	280	22-3	22-3	500
	150	360	280	240	210	320	24-3	24-3	600
	200	400	335	295	365	370	26-3	26-3	800
Q41F-25P(R)	40	180	145	110	85	160	16-3	16-3	240
	50	200	160	125	100	205	20-3	20-3	270
	65	220	180	145	120	215	22-3	22-3	350
	80	250	195	160	135	230	22-3	22-3	400
	100	280	230	190	160	270	24-3	24-3	500
	125	320	270	220	188	300	28-3	28-3	600
	150	360	300	250	218	340	30-3	30-3	900
	200	400	360	310	278	400	34-3	34-3	1100
Q41F-40P(R)	15	130	95	65	45	60	16-2	16-2	40
	20	140	105	75	55	65	16-2	16-2	51
	25	150	115	85	65	90	18-2	18-2	58
	32	180	135	100	78	105	18-3	18-3	66
	40	200	145	110	85	170	18-3	18-3	76
	50	220	160	125	100	230	20-3	20-3	88
	65	250	180	145	120	250	22-3	22-3	110
	80	280	195	160	135	250	22-3	22-3	121
	100	320	230	190	160	295	24-3	24-3	150
	125	400	270	220	188	330	28-3	28-3	176
	150	400	300	250	218	375	30-3	30-3	204
	200	550	375	320	282	440	38-3	38-3	260

Whatsapp:+852-59345951 E-mail: info@valve-yz.com Skype: blue.sky1

YUzheng Valve Pipefitting Manufacturing 誉正阀门 www.valve-yz.com

美标球阀150LB 150LB Flanged ball valve



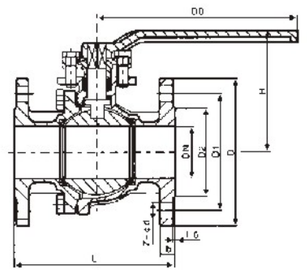

150Lb连接尺寸和外形尺寸（mm） 150Lb External and connecting dimensions（mm）

公称通径 DN Nominal Diameter IN	MM	单位压力级 unitary pressure grade	L	D	D1	D2	H	B	Z-Φd	Do
1/2"	15	150Lb	108	89	60.5	35	72	12	4-15	115
		10-k	108	95	70	52	72	12	4-15	115
3/4"	20	150Lb	117	98	70	43	76	12	4-15	115
		10-k	117	100	75	58	76	14	4-15	115
1"	25	150Lb	127	108	79.5	51	92	12	4-15	150
		10-k	127	125	90	70	92	14	4-19	150
11/2"	40	150Lb	165	127	98.5	73	123	14.3	4-16	200
		10-k	165	140	105	85	123	16	4-19	200
2"	50	150Lb	178	152	120.5	92	132	15.9	4-19	200
		10-k	178	155	120	100	132	16	4-19	200
21/2"	65	150Lb	190	178	139.5	105	164	17.5	4-19	320
		10-k	190	175	140	120	164	18	4-19	320
3"	80	150Lb	203	190	152.4	127	173	19.1	4-19	320
		10-k	203	185	150	130	173	18	8-19	320
4"	100	150Lb	229	229	190.5	157	210	23.9	8-19	450
		10-k	229	210	175	155	210	18	8-19	450
6"	150	150Lb	394	279	241.5	216	288	26	8-22	800
		10-k	394	280	240	215	288	22	8-23	800
8"	200	150Lb	457	343	298.5	270	374	29	8-22	1120
		10-k	457	330	290	265	374	22	12-23	1120
10"	250	150Lb	533	406	362	324	366	31	12-25	1420
		10-k	533	400	365	325	366	34	12-25	1420
12"	300	150Lb	610	483	432	381	412	32	12-25	1420
		10-k	610	445	400	390	412	35	16-25	1420

Whatsapp:+852-59345951 E-mail: info@valve-yz.com Skype: blue.sky1

美标球阀 300LB 300LB Flanged ball valve

主要性能规范 Chief property and specification

材质名称 Name of material	适用温度 Working temperature	适用介质 SuitableMedium
CF8	≤50℃	NITRIC ACID
0Cr18Ni9		硝酸类
CF8M		NITRIC ACID
0Cr18Ni12Mo2Ti		硝酸类
CF3		NITRIC ACID
00Cr18Ni10		硝酸类
CF3M		NITRIC ACID
00Cr17Ni14Mo2		硝酸类

执行标准 Executive standard

项目 Item	设计制作 Design and manufacture	压力温度等级 Pressure temperature lating
标准 Standard	API6D	ANSI B16.34
法兰标准 Flange Standard	结构长度 Face toface/Length	检查和试验 Spection and test
ANSI B16.10	ANSI B16.5	API 598

试验压力 Test pressure

型号 Type	Mpa	PSI
强度试验 Shell test	7.7	1'125
高压密封试验（水） Sealing test (Water)	5.8	815
低压密封试验（空气） Sealing test (Air)	5~7 巴 Bar	

试验压力 (API598)Test pressure(API598)

型号 Type	Mpa	PSI
强度试验 Shell test	3.0	450
高压密封试验（水） Sealing test (Water)	2.2	314
低压密封试验（空气） Sealing test (Air)	5~7 巴 Bar	

300Lb连接尺寸和外形尺寸（mm） 300Lb External and connecting dimensions （mm）

公称通径 DN Nominal Diameter		单位压力级 unitary pressure grade	L	D	D1	D2	H	B	Z-Φd	Do
IN	MM									
1/2"	15	300Lb	140	95	66.5	35	72	15	4-15	115
		20-k	140	95	70	52	72	14	4-15	115
3/4"	20	300Lb	152	117	82.5	43	76	16	4-19	115
		20-k	152	100	75	58	76	16	4-15	115
1"	25	300Lb	165	124	89	51	92	18	4-19	150
		20-k	165	125	90	70	92	16	4-19	150
1½"	40	300Lb	190	156	114.5	73	123	20.7	4-22	200
		20-k	190	140	105	85	123	18	4-19	200
2"	50	300Lb	216	165	127	92	132	22.3	8-19	200
		20-k	216	155	120	100	132	18	8-19	200
2½"	65	300Lb	241	190	149	105	164	25.4	8-22	320
		20-k	241	175	140	120	164	20	8-19	320
3"	80	300Lb	283	210	168.5	127	173	28.5	8-22	320
		20-k	283	200	160	135	173	22	8-23	320
4"	100	300Lb	305	254	200	157	210	31.8	8-22	450
		20-k	305	225	185	160	210	24	8-23	450
6"	150	300Lb	403	318	270	216	336	36.6	12-22	800
		20-k	403	305	260	230	336	28	12-25	800
8"	200	300Lb	502	381	330	270	385	42	12-25	1120
		20-k	502	350	305	275	385	30	12-25	1120
10"	250	300Lb	568	444	387.5	324	370	48	16-29	1420
		20-k	568	430	380	245	370	34	16-27	1420

Whatsapp:+852-59345951 E-mail: info@valve-yz.com Skype: blue.sky1

YUzheng Valve Pipefitting Manufacturing 誉正阀门 www.valve-yz.com

法兰截止阀 Flange globe valve(GB)



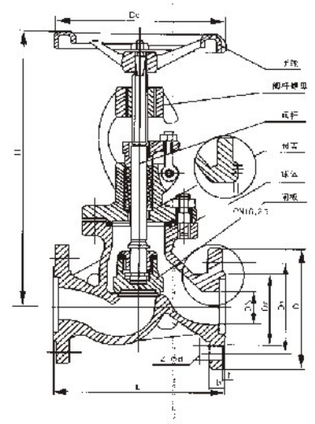

性能范围 Specifications

型号 Type	公称压力 Nominal Pressure	试验压力 Test Pressure			工作温度(℃) Working Temperature	适用介质 Suitable Medium
		强度（水）(Mpa)	密封（水）空气 (Mpa)	低压密封空气 (Mpa)		
J41W-16P(R)	1.6	2.4	1.8	0.6	≤200	NITRIC ACID
						硝酸类
J41W-25P(R)	2.5	3.8	2.8	0.6	≤200	NITRIC ACID
						硝酸类
J41W-40P(R)	4.0	6.0	4.4	0.6	≤200	NITRIC ACID
						硝酸类
J41W-64P(R)	6.4	9.6	7.0	0.6	≤200	NITRIC ACID
						硝酸类

主要零件材料 Material for main parts

零件名称 Part Name	材料 Material	
	Q41W-16R -25P -40R	Q41W-16R -25P -40R
阀体、阀盖 Body donnet	铬镍钛钢 Cr Ni Ti steel	铬镍钼钛钢 Cr Ni Mo Ti steel
阀板 Wedge gate		
阀杆 Stem		
阀杆螺母 Stem nut	铝铁青铜 Al bronze	
手轮 Hand wheel	灰铸铁、可锻铸铁 Casti rom forag eable casr iron	

主要连接尺寸和外形尺寸 Main connecting and overall dimensions

型号 Type	公称通径 DN Nominal Diameter	尺寸（mm） Dimensions							
		L	D	D1	D2	H	B-f	Z-Φd	D0
J41W-16P(R)	15	130	95	65	45	170	16-2	4-14	120
	20	150	105	75	55	190	16-2	4-14	140
	25	160	115	85	65	205	16-2	4-14	160
	32	180	135	100	78	270	18-2	4-18	180
	40	200	145	110	85	310	18-3	4-18	200
	50	230	160	125	100	358	18-3	4-18	240
	65	290	180	145	120	373	18-3	4-18	280
	80	310	195	160	135	435	20-3	8-18	320
	100	350	215	180	155	500	20-3	8-18	360
	125	400	245	210	185	614	22-3	8-18	400
	150	480	280	240	210	674	24-3	8-23	400
	200	600	335	295	265	818	26-3	12-23	450
	250	730	405	355	320	969	30-3	12-25	550

Whatsapp:+852-59345951 E-mail: info@valve-yz.com Skype: blue.sky1

法兰截止阀Flange globe valve(GB)

主要连接尺寸和外形尺寸 Main connecting and overall dimensions

型号 Type	公称通径 DN Nominal Diameter	尺寸（mm） Dimensions							
		L	D	D_1	D_2	H	B–f	Z–Φd	D_0
J41W–25P(R)	15	130	95	65	45	233	16–2	4–14	120
	20	150	105	75	55	275	16–2	4–14	140
	25	160	115	85	65	285	16–2	4–14	160
	32	180	135	100	78	302	18–2	4–18	180
	40	200	145	110	85	355	18–3	4–18	200
	50	230	160	125	100	362	20–3	4–18	240
	65	290	180	145	120	400	22–3	8–18	280
	80	310	195	160	135	430	22–3	8–18	320
	100	350	230	190	160	465	24–3	8–23	360
	125	400	270	220	188	550	28–3	8–25	400
	150	480	300	250	218	700	30–3	8–25	400
	200	600	360	310	278	780	34–3	12–25	450
	250	730	425	370	335	900	36–3	12–30	550

性能范围 Specifications

型号 Type	公称通径 DN Nominal Diameter	尺寸（mm） Dimensions							
		L	D	D_1	D_2	H	C–f	Z–Φd	D_0
J41W–40P(R)	15	130	95	65	45	233	16–2	4–14	40
	20	150	105	75	55	275	16–2	4–14	51
	25	160	115	85	65	285	16–2	4–14	58
	32	180	135	100	78	302	18–2	4–18	66
	40	200	145	110	85	355	18–3	4–18	76
	50	230	160	125	100	370	20–3	4–18	88
	65	290	180	145	120	408	22–3	8–18	110
	80	310	195	160	135	435	22–3	8–18	121
	100	350	230	190	160	475	24–3	8–23	150
	125	400	270	220	188	558	28–3	8–25	178
	150	480	300	250	218	720	30–3	8–25	204
	200	600	375	320	282	800	38–3	12–30	260
J41W–64P(R)	150	170	105	75	55	240	18–2	4–14	41
	20	190	125	90	68	280	20–2	4–18	51
	25	210	135	100	78	290	22–2	4–18	58
	32	230	150	110	82	325	24–2	4–23	66
	40	260	165	125	95	360	24–3	4–23	76
	50	300	175	135	105	410	26–3	4–23	88
	65	340	200	160	130	430	28–3	8–23	110
	80	380	210	170	140	465	30–3	8–23	121
	100	430	250	200	168	537	32–3	8–25	150
	125	500	295	240	202	630	36–3	8–30	176
	150	550	340	280	240	790	38–3	8–34	204
	200	650	405	345	300	910	44–3	12–35	260

Whatsapp:+852-59345951 E-mail: info@valve-yz.com Skype: blue.sky1

YUzheng Valve Pipefitting Manufacturing 誉正阀门 www.valve-yz.com

美标截止阀150LB 150LB Flanged globe valve



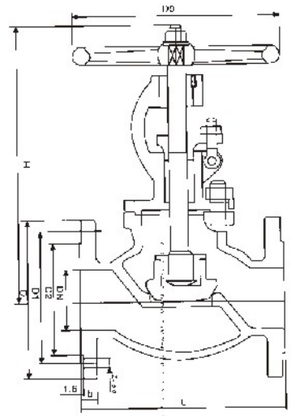

试验压力 Test pressure

型号 Type	Mpa	PSI
强度试验 Shell test	3.0	450
高压密封试验（水） Sesling test (Water)	2.2	314
低压密封试验（空气） Sealing test (Air)	5~7 巴 Bar	

主要性能范围 Chief property and specification

材质名称 Name of material	适用温度 Working temperature	适用介质 SuitableMedium
CF8	≤200℃	NITRIC ACID
0Cr18Ni9		硝酸类
CF8M		NITRIC ACID
0Cr18Ni12Mo2Ti		硝酸类
CF3		NITRIC ACID
00Cr18Ni10		硝酸类
CF3M		NITRIC ACID
00Cr17Ni14Mo2		硝酸类

150Lb连接尺寸和外形尺寸（mm） 300Lb External and connecting dimensions（mm）

公称通径 NPS NominalDiameter		单位压力级 unitary pressure grade	L	D	D_1	D_2	H	B	N–Φd	Do
IN	MM									
1/2"	15	150Lb	108	89	60.5	35	169	12	4–15	125
		10–k	108	95	70	52	169	12	4–15	125
3/4"	20	150Lb	117	98	70	43	180	12	4–15	125
		10–k	117	100	75	58	180	14	4–15	125
1"	25	150Lb	127	108	79.5	51	190	12	4–15	125
		10–k	127	125	90	70	190	14	4–19	125
1½"	40	150Lb	165	127	98.5	73	347	14.3	4–16	180
		10–k	165	140	105	85	347	16	1–19	180
2"	50	150Lb	203	152	120.5	92	356	15.9	4–19	180
		10–k	203	155	120	100	356	16	4–19	180
2½"	65	150Lb	216	178	139.5	105	381	17.5	4–19	240
		10–k	216	175	140	120	381	18	4–19	240
3"	80	150Lb	241	190	152.5	127	413	19.1	4–19	280
		10–k	241	185	150	130	413	18	8–19	280
4"	100	150Lb	292	229	190.5	157	500	23.9	8–19	280
		10–k	292	210	175	155	500	18	8–19	280
6"	150	150Lb	406	279	241.5	216	656	25.4	8–22	360
		10–k	406	280	240	215	656	22	8–23	360
8"	200	150Lb	495	343	298.5	270	660	28.5	8–22	450
		10–k	495	330	290	265	660	22	8–23	450

Whatsapp:+852-59345951 E-mail: info@valve-yz.com Skype: blue.sky1

美标截止阀300LB、600LB 300LB/600LB Flanged globe valve

试验压力 Test pressure 300Lb

型号 Type	Mpa	PSI
强度试验 Shell test	7.7	1125
高压密封试验（水） Sesling test（Water）	5.8	815
低压密封试验（空气） Sealing test（Air）	5~7 巴 Bar	

试验压力 (API598)Test pressure600Lb

型号 Type	Mpa	PSI
强度试验 Shell test	15.4	2225
高压密封试验（水） Sesling test（Water）	5.8	1628
低压密封试验（空气） Sealing test（Air）	5~7 巴 Bar	

300Lb连接尺寸和外形尺寸（mm） 300Lb External and connecting dimensions （mm）

公称通径 NPS NominalDiameter IN	公称通径 NPS NominalDiameter MM	单位压力级 unitary pressure grade	L	D	D_1	D_2	H	B	Z-Φd	Do
1/2"	15	300Lb	152	95	66.5	35	35	15	4-15	125
		20-k	152	95	70	52	52	14	4-15	125
3/4"	20	300Lb	178	117	82.5	43	43	16	4-19	125
		20-k	178	100	75	58	58	16	4-15	125
1"	25	300Lb	203	124	89	51	51	18	4-19	160
		20-k	203	125	90	70	70	16	4-19	160
1 1/2"	40	300Lb	229	156	114.5	73	73	20.7	4-22	200
		20-k	229	140	105	85	85	18	4-19	200
2"	50	300Lb	267	165	127	92	92	22	8-19	200
		20-k	267	155	120	100	100	18	8-19	200
2 1/2"	65	300Lb	292	190	149	105	105	25	8-22	240
		20-k	292	175	140	120	120	20	8-0.88	240
3"	80	300Lb	318	210	168.5	127	127	29	8-22	280
		20-k	318	200	160	135	135	22	8-23	280
4"	100	300Lb	356	254	200	157	157	32	12-22	320
		20-k	356	255	185	160	160	24	8-23	320
6"	150	300Lb	444	318	270	216	216	37	12-22	500
		20-k	444	305	260	230	230	28	12-25	500
8"	200	300Lb	559	381	330	270	270	41	12-25	500
		20-k	55	350	305	275	275	30	12-25	500

600Lb连接尺寸和外形尺寸（mm） 600Lb External and connecting dimensions （mm）

公称通径NPS NominalDiameter IN	公称通径NPS NominalDiameter MM	单位压力级 unitary pressure grade	L	D	D_1	D_2	H	B	Z-Φd	Do
1/2"	15	600Lb	165	95	66.5	285	35	15	4-15	160
3/4"	20	600Lb	190	117	82.5	285	43	16	4-19	160
1"	25	600Lb	216	124	89	313	51	18	4-19	160
1 1/2"	40	600Lb	241	156	11.5	365	73	23	4-22	240
2"	50	600Lb	292	165	127	444	92	25	8-19	240
2 1/2"	65	600Lb	330	190	149	483	105	29	8-22	240
3"	80	600Lb	356	210	168	533	127	32	8-22	280
4"	100	600Lb	432	273	216	622	157	38	8-25	360
6"	150	600Lb	559	356	292	800	216	47.7	12-20	500
8"	200	600Lb	660	419	349	927	270	55.6	12-32	550

Whatsapp:+852-59345951 E-mail: info@valve-yz.com Skype: blue.sky1

YUzheng Valve Pipefitting Manufacturing 誉正阀门 www.valve-yz.com

法兰闸阀(GB) Flanged gate valve(GB)



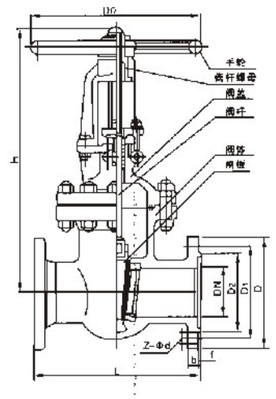

性能范围 Specifications

型号 Type	公称压力 Nominal Pressure	试验压力 Test Pressure 强度（水）（Mpa）	试验压力 Test Pressure 密封（水）空气（Mpa）	试验压力 Test Pressure 低压密封空气（Mpa）	工作温度(℃) Working Temperature	适用介质 Suitable Medium
Z41H-16C Z41W-16P(R)	1.6	2.4	2.4	0.6	≤20	NITRIC ACID 硝酸类
Z41W-25P(R)	2.5	3.8	3.8	0.6	≤200	NITRIC ACID 硝酸类
Z41W-40P(R)	4.0	6.0	6.0	0.6	≤200	NITRIC ACID 硝酸类
Z41W-64P(R)	6.4	9.6	9.6	0.6	≤2000	NITRIC ACID 硝酸类

主要零件材料 Material for main parts

零件名称 Part Name	材料 Material Q41Y-16I -25I -40I	材料 Material Q41W-16P -25P -40P	材料 Material Q41W-16R -25P -40R
阀体、阀盖 Body donnet	铬镍钢 Ci Ni Steel	铬镍钛钢 Ci Ni Ti steel	铬镍钼钛钢 Ci Ni Mo Ti steel
阀板 Wedge gate	合金钢+硬质合金 Alloy steel +carbidealloy		
阀杆 Stem	合金钢 Alloy steel		
阀杆螺母 Stem nut	铝铁青铜 Al bronze		
手轮 Hand wheel	灰铸铁、可锻铸铁 Cast iron forging iron		

主要连接尺寸和外形尺寸 Main connecting and overall dimensions

型号 Type	公称通径 DN Nominal Diameter	尺寸（mm） Dimensions L	D	D_1	D_2	H	B-f	Z-Φd	Do
Z41W-16P(R)	15	130	95	65	45	170	16-2	4-14	120
	20	150	105	75	55	190	16-2	4-14	140
	25	160	115	85	65	205	16-2	4-14	160
	32	180	135	100	78	270	18-2	4-18	180
	40	200	145	110	85	310	18-3	4-18	200
	50	250	160	125	100	358	18-3	4-18	240
	65	265	180	145	120	373	18-3	4-18	240
	80	280	195	160	135	435	20-3	8-18	280
	100	300	215	180	155	500	20-3	8-18	300
	125	325	245	210	185	614	22-3	8-18	320
	150	350	280	240	210	674	24-3	8-23	360
	200	400	335	295	265	818	26-3	12-23	400
	250	450	405	355	320	969	30-3	12-25	450
	300	500	460	410	375	1145	30-4	12-25	560

Whatsapp:+852-59345951 E-mail: info@valve-yz.com Skype: blue.sky1

法兰闸阀(GB) Flanged gate valve(GB)

主要连接尺寸和外形尺寸 Main connecting and overall dimensions

型号 Type	公称通径 DN Nominal Diameter	尺寸（mm） Dimensions							
		L	D	D_1	D_2	H	B-f	Z-Φd	Do
Z41W-25P(R)	15	130	95	65	45	170	16-2	4-14	120
	20	150	105	75	55	190	16-2	4-14	140
	25	160	115	85	65	205	16-2	4-14	160
	32	180	135	100	78	270	18-2	4-18	180
	40	200	145	110	85	310	18-3	4-18	200
	50	250	160	125	100	358	20-3	4-18	240
	65	265	180	145	120	373	22-3	8-18	240
	80	280	195	160	135	435	22-3	8-18	280
	100	300	230	190	160	500	24-3	8-23	320
	125	325	270	220	188	614	28-3	8-25	360
	150	350	300	250	218	674	30-3	8-25	400
	200	400	360	310	278	818	34-3	12-25	400
	250	450	425	370	332	969	36-3	12-30	450
	300	500	485	430	390	1145	40-4	16-30	560

主要连接尺寸和外形尺寸 Main connecting and overall dimensions

型号 Type	公称通径 DN Nominal Diameter	尺寸（mm） Dimensions							
		L	D	D_1	D_2	H	B-f	Z-Φd	Do
Z41W-40P(R)	15	130	95	65	45	170	16-2	4-14	40
	20	150	105	75	55	190	16-2	4-14	51
	25	160	115	85	65	205	16-2	4-14	58
	32	180	135	100	78	270	18-2	4-18	66
	40	200	145	110	85	310	18-3	4-18	76
	50	250	160	125	100	371	20-3	4-18	88
	65	290	180	145	120	391	22-3	8-18	110
	80	310	195	160	135	455	22-3	8-18	121
	100	350	230	190	160	551	24-3	8-23	150
	125	400	270	220	188	628	28-3	8-25	178
	150	450	300	250	218	708	30-3	8-25	204
	200	550	375	320	282	885	38-3	12-25	260
	250	650	445	385	345	960	42-3	12-30	313
Z41W-64P(R)	15	170	105	75	55	140	18-2	4-14	41
	20	190	125	90	68	195	20-2	4-18	51
	25	210	135	100	78	210	22-2	4-18	58
	32	230	150	110	82	280	24-2	4-23	66
	40	240	165	125	95	328	24-3	4-23	76
	50	250	175	135	105	390	26-3	4-23	88
	65	280	200	160	130	410	28-3	8-23	110
	80	310	210	170	140	485	30-3	8-23	121
	100	350	250	200	168	590	32-3	8-25	150
	125	400	295	240	202	688	36-3	8-30	176
	150	450	340	280	240	768	38-3	8-34	204
	200	550	405	345	300	973	44-3	12-34	260
	250	650	470	400	352	1050	48-3	12-41	313

Whatsapp:+852-59345951 E-mail: info@valve-yz.com Skype: blue.sky1

YUzheng Valve Pipefitting Manufacturing 誉正阀门 www.valve-yz.com

美标闸阀150LB 150LB Flanged gate valve



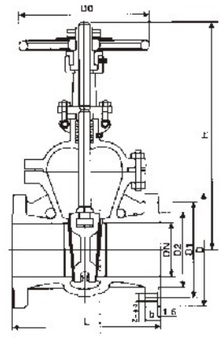

试验压力 Test pressure

型号 Type	Mpa	PSI
强度试验 Shell test	3.0	450
高压密封试验（水） Sesling test（Water）	2.2	314
低压密封试验（空气） Sealing test（Air）	5~7 巴 Bar	

主要性能范围 Chief property and specification

材质名称 Name of material	适用温度 Working temperature	适用介质 SuitableMedium
CF8	≤200℃	NITRIC ACID
0Cr18Ni9		硝酸类
CF8M		NITRIC ACID
0Cr18Ni12Mo2Ti		硝酸类
CF3		NITRIC ACID
00Cr18Ni10		硝酸类
CF3M		NITRIC ACID
00Cr17Ni14Mo2		硝酸类

150Lb连接尺寸和外形尺寸（mm） 150Lb External and connecting dimensions（mm）

公称通径 NPS NominalDiameter		单位压力级 unitary pressure grade	L	D	D_1	D_2	H	B	Z-Φd	Do
IN	MM									
1/2"	15	150Lb	108	89	60.5	35	188	12	4-15	90
		10-k	108	95	70	52	188	12	4-15	90
3/4"	20	150Lb	117	98	70	43	202	12	4-15	90
		10-k	117	100	75	58	202	14	4-15	90
1"	25	150Lb	127	108	79.5	51	225	12	4-15	100
		10-k	127	125	90	70	225	14	4-19	100
1/2"	40	150Lb	165	127	98.5	73	362	14.3	4-16	200
		10-k	165	140	105	85	362	16	4-19	200
2"	50	150Lb	178	152	120.5	92	409	15.9	4-19	200
		10-k	178	155	120	100	409	16	4-19	200
21/2"	65	150Lb	190	178	139.5	105	500	17.5	4-19	250
		10-k	190	175	140	120	500	18	4-19	250
3"	80	150Lb	203	190	152.5	127	570	19.1	4-19	250
		10-k	203	185	150	130	570	18	8-19	250
4"	100	150Lb	229	229	190.5	157	590	23.9	8-19	250
		10-k	229	210	175	155	590	18	8-19	250
6"	150	150Lb	267	279	241.5	216	630	25.4	8-22	300
		10-k	267	280	240	215	630	22	8-23	300
8"	200	150Lb	292	343	298.5	270	960	28.5	8-22	350
		10-k	292	330	290	265	960	22	12-23	350
10"	250	150Lb	330	406	362	324	1158	30.2	12-25	400
		10-k	330	400	355	325	1158	24	12-25	400
12"	300	150Lb	356	483	432	381	1378	31.8	12-25	450
		10-k	356	445	400	390	1378	24	16-25	450
14"	350	150Lb	381	533	476	413	1543	35	12-29	500
		10-k	381	480	445	431	1543	25	16-27	500
16"	400	150Lb	406	597	539	470	1738	36.6	16-29	600
		10-k	406	560	510	475	1738	28	16-27	600

Whatsapp:+852-59345951 E-mail: info@valve-yz.com Skype: blue.sky1

美标闸阀150LB、600LB 300LB/600LB Flanged gate valve

试验压力300Lb Test pressure300Lb

型号 Type	Mpa	PSI
强度试验 Shell test	7.7	1125
高压密封试验（水） Sealing test (Water)	5.8	815
低压密封试验（空气） Sealing test (Air)	5~7 巴 Bar	

试验压力600Lb Test pressure600Lb

型号 Type	Mpa	PSI
强度试验 Shell test	15.4	2225
高压密封试验（水） Sealing test (Water)	5.8	1628
低压密封试验（空气） Sealing test (Air)	5~7 巴 Bar	

300Lb连接尺寸和外形尺寸（mm） 300Lb External and connecting dimensions （mm）

公称通径 NPS NominalDiameter IN	公称通径 NPS NominalDiameter MM	单位压力级 unitary pressure grade	L	D	D_1	D_2	H	B	Z-Φd	Do
1/2"	15	300Lb	140	95	66.5	35	201	15	4-15	100
		20-k	140	95	70	52	201	14	4-15	100
3/4"	20	300Lb	152	117	82.5	43	212	16	4-19	100
		20-k	152	100	75	58	212	16	4-15	100
1"	25	300Lb	165	124	89	51	237	18	4-19	140
		20-k	165	125	90	70	137	16	4-19	140
11/2"	40	300Lb	190	156	114.5	73	407	20.7	4-22	200
		20-k	190	140	105	85	407	18	4-19	200
2"	50	300Lb	216	165	127	92	424	22.3	8-19	200
		20-k	216	155	120	100	424	18	8-19	200
21/2"	65	300Lb	241	190	149	105	265	25.4	8-22	250
		20-k	241	175	140	120	265	20	8-19	250
3"	80	300Lb	283	210	168.5	127	535	28.5	8-22	250
		20-k	283	200	160	135	535	22	8-23	250
4"	100	300Lb	305	254	200	157	615	31.8	8-22	250
		20-k	305	225	185	160	615	24	8-23	250
6"	150	300Lb	403	318	270	216	795	36.6	12-22	350
		20-k	403	305	260	230	795	28	12-25	350
8"	200	300Lb	419	381	330	270	1012	41.3	12-25	400
		20-k	419	350	305	275	1012	30	12-25	400
10"	250	300Lb	457	444	387.5	324	1231	47.7	16-29	450
		20-k	457	430	380	345	1231	34	16-27	450

600Lb连接尺寸和外形尺寸（mm）600Lb External and connecting dimensions （mm）

公称通径 NPS NominalDiameter IN	公称通径 NPS NominalDiameter MM	单位压力级 unitary pressure grade	L	D	D_1	D_2	H	B	Z-Φd	Do
2"	15	600Lb	292	165	127	92	458	25.4	8-19	250
21/2"	20	600Lb	330	190	149	105	485	58.6	8-22	250
3"	25	600Lb	356	210	168	127	570	31.8	8-22	250
4"	40	600Lb	432	273	216	157	690	38.1	8-25	350
6"	50	600Lb	559	356	292	216	910	47	12-29	450
8"	65	600Lb	660	419	349	270	1064	55.6	12-32	500

Whatsapp:+852-59345951 E-mail: info@valve-yz.com Skype: blue.sky1

YUzheng Valve Pipefitting Manufacturing 誉正阀门 www.valve-yz.com

升降式法兰止回阀 Lift flanged check valve



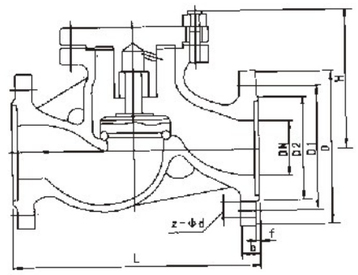

性能范围 Specifications

型号 Type	公称压力 Nominal Pressure	试验压力 Test Pressure 强度（水）（Mpa）	试验压力 Test Pressure 密封（水）空气（Mpa）	试验压力 Test Pressure 低压密封 空气（Mpa）	工作温度(℃) Working Temperature	适用介质 Suitable Medium
H41W-16P(R)	1.6	2.4	1.8	0.6	≤200	NITRIC ACID 硝酸类
H41W-25P(R)	2.5	3.8	2.8	0.6	≤200	NITRIC ACID 硝酸类
H41W-40P(R)	4.0	6.0	4.4	0.6	≤200	NITRIC ACID 硝酸类

主要连接尺寸和外形尺寸 Main connecting and overall dimensions

型号 Type	公称通径 DN Nominal Diameter	尺寸（mm） Dimensions L	D	D_1	D_2	H	B	Z-Φd
H41W-16P(R)	15	130	95	65	45	77	14	4-14
	20	150	105	75	55	77	14	4-14
	25	160	115	85	65	80	16	4-14
	32	180	135	100	78	85	16	4-18
	40	200	145	110	85	95	16	4-18
	50	230	160	125	100	105	16	4-18
	65	290	180	145	120	120	18	4-18
	80	310	195	160	135	130	20	8-18
	100	350	215	180	155	140	20	8-18
	125	400	245	210	185	155	22	8-18
	150	480	280	240	210	180	24	8-23
	200	600	335	295	265	215	26	12-23
H41W-25P(R)	15	130	95	65	45	77	16	4-14
	20	150	105	75	55	77	16	4-14
	25	160	115	85	65	80	16	4-14
	32	180	135	100	78	85	18	8-18
	40	200	145	110	85	95	18	8-18
	50	230	160	125	100	105	20	8-18
	65	290	180	145	120	120	21	8-18
	80	310	195	160	135	130	22	8-18
	100	350	230	190	160	140	24	8-23
	125	400	270	220	188	155	28	8-25
	150	480	300	250	218	180	30	8-25
	200	600	360	310	278	215	34	12-35

Whatsapp:+852-59345951 E-mail: info@valve-yz.com Skype: blue.sky1

旋启式法兰止回阀(GB) Swing flanged check valve(GB)



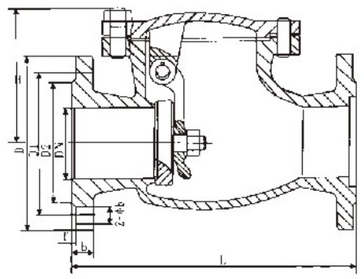

性能范围 Specifications

型号 Type	公称压力 Nominal Pressure	试验压力 Test Pressure			工作温度(℃) Working Temperature	适用介质 Suitable Medium
		强度（水）（Mpa）	密封（水）空气（Mpa）	低压密封 空气（Mpa）		
H41W-16P(R)	1.6	2.4	1.8	0.6	≤200	NITRIC ACID 硝酸类
H41W-25P(R)	2.5	3.8	2.8	0.6	≤200	NITRIC ACID 硝酸类
H41W-40P(R)	4.0	6.0	4.4	0.6	≤200	NITRIC ACID 硝酸类

主要连接尺寸和外形尺寸 Main connecting and overall dimensions

型号 Type	公称通径 DN Nominal Diameter	尺寸（mm） Dimensions						
		L	D	D_1	D_2	B	Z-Φd	H
H44W-16P(R)	40	200	145	110	85	19	4-18	140
	50	230	165	125	100	20	4-18	148
	65	290	180	145	120	20	4-18	160
	80	310	195	160	135	22	8-18	172
	100	350	215	180	155	22	8-18	178
	125	400	245	210	185	24	8-18	250
	150	480	280	240	210	24	8-23	255
	200	550	335	295	265	26	12-23	295
	250	650	405	355	320	26	12-25	442
	300	750	460	410	375	30	12-25	450
	350	850	520	470	435	34	16-25	540
	400	950	580	525	485	36	16-30	555
	500	1150	705	650	608	44	20-34	650

Whatsapp:+852-59345951 E-mail: info@valve-yz.com Skype: blue.sky1

YUzheng Valve Pipefitting Manufacturing 誉正阀门 www.valve-yz.com

API旋启式止回阀API Swing check valve



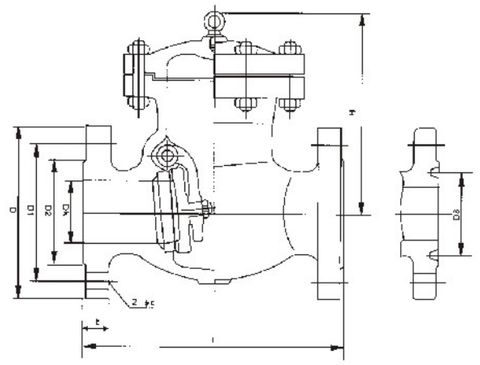

主要性能规范 Chief property and specification

试验压力 Test Pressure	公称压力NominalPressure(Lb)			
	150	300		400
壳体强度试验 Shell test	3.1	7.8		10.3
密封 试验 Seal test	2.2	5.6		7.6
阀体材料 Material of valve	WCB(C)	CF8(P)	CF8M(R)	Wc6 Wc9 (V)
工作温度(℃) Working Temperature	≤425	≤100	≤100	≤540
适用介质 Applicable medium	水、蒸汽、油品 Water，steam，oil	硝酸类 Nitric acid	醋酸类 Acetic acid	水、蒸汽 Water，steam

执行标准

Executive Standard

设计制造：ANSI B16.34
Designing and Manafulturing
结构长度：ANSI B16.5
Face to face：ANSI B16.5
检验与试验：API598、API16D
Inspection and Test Standard
API598、API16D

主要连接尺寸和外形尺寸 Main connecting and overall dimensions

公称通径 NPS NominalDiameter		单位 Unit	主要外形尺寸和连接尺寸（mm） Dimensions						
IN	MM		L	D	D_1	D_2	H	Z-Φd	Do
2"	50	in	9.00	6.00	4.75	3.62	0.75	4-0.75	6.34
		mm	203	157	120.7	92	19.5	4-19	161
21/2"	65	in	8.50	7.00	5.50	4.12	0.88	4-0.75	7.08
		mm	216	178	139.7	105	22.5	4-19	180
3"	80	in	9.50	7.50	6.00	5.00	0.94	4-0.75	7.48
		mm	241	190.5	152.4	127	24	1-19	190
4"	100	in	11.50	9.00	7.50	6.19	0.94	8-0.75	8.66
		mm	292	229	190.5	157.2	24	8-19	220
6"	150	in	14.00	11.00	9.50	8.50	1.00	4-0.88	10.12
		mm	356	279	241.5	216	25.5	8-22.5	257
8"	200	in	19.50	13.50	11.75	10.62	1.12	8-0.88	11.50
		in	495	343	298.5	270	29	8-22.5	292
10"	250	mm	24.5	16.00	14.25	12.75	1.19	12-1.00	13.78
		in	622	406	362	324	30.5	12-25	350
12"	300	in	27.50	19.00	17.00	15.00	1.25	12-1.00	15.60
		mm	699	483	432	381	32	12-25	38

Whatsapp:+852-59345951 E-mail: info@valve-yz.com Skype: blue.sky1

立体法兰止回阀 Vertical flanged check valve





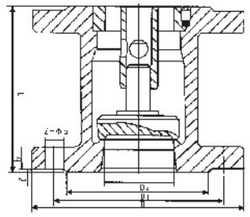

H42W–25P

性能规范

>制造与验收按GB/T12224–1989的规定

>其它技术要求按JB2887–81的规定

>阀门检查和试验GB/T13927–92的规定

Specifications

>Making and confirming according to the regulation of GB/T12224–1989;

>Other technical requirements,according to the regulation of JB2887–81;

>The valve is checked and tested according to the regulation of GB/T13927–92.

主要连接尺寸和外形尺寸 Main connecting and overall dimensions

型号 Type	公称通径DN	L	D	D1	D2	B	Z–φd
H42W–25P(R)	15	85	95	65	45	16	4–φ14
	20	95	105	75	55	16	4–φ14
	25	100	115	85	65	16	4–φ14
	32	105	135	100	78	16	4–φ18
	40	115	145	110	88	18	4–φ18
	50	125	160	125	100	20	4–φ18
	65	145	180	145	120	22	8–φ18
	80	155	195	160	135	22	8–φ18
	100	210	230	190	160	24	8–φ23
	125	275	275	220	188	28	8–φ25
	150	325	300	250	218	30	8–φ25
	200	380	360	310	278	34	12–φ25

Whatsapp:+852-59345951 E-mail: info@valve-yz.com Skype: blue.sky1

YUzheng Valve Pipefitting Manufacturing 誉正阀门 www.valve-yz.com

法兰Y型过滤器 Y Type flanged strainer



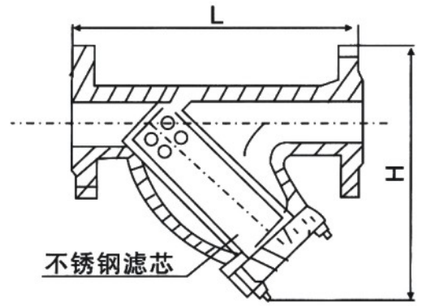

主要用途及特点 The main purpose and features

Y型过滤器是输送介质的管道系统不可缺少的一种装置，通常安装在减压阀、泄压阀、定水位阀或其它设备的进口端，用来清除介质中的杂质，以保护阀门及设备的正常使用，该过滤器具有结构先进，阻力小，排污方便等特点。适用于水、油、汽。一般通水网为18–30目/cm²,通油网为100–480目/cm²，可按用户要求制作滤网。

Y–type filter media transmission pipeline system is indispensable to a device, usually installed in the valve, pressure relief valve, water valves or other fixed Inlet of the equipment used to remove impurities in the medium to protect the valves and equipment, the normal use, the filter has advanced structure, small resistance,Sewage and convenient. For water, oil, steam. General water network for the 18–30 mesh pass / cm² , 100–480 mesh nets through the oil / cm² , according to the user to Seek to make the filter.

主要连接尺寸和外形尺寸 Main connection dimensions and overall dimensions

公称通径DN (mm)	主要外形及连接尺寸(mm)																		
	L		D			D1			b			z–d			H		H1	
	螺纹	法兰	PN10	PN16	PN25	PN10	PN16	PN25	PN10	PN16	PN25	PN10	PN16	PN25	螺纹	法兰	螺纹	法兰
15	90	140	90	95	95	65	65	65	14	14	14	4–φ14	4–φ14	4–φ14	75	73	105	103
20	100	150	105	105	105	75	75	75	16	16	16	4–φ14	4–φ14	4–φ14	85	88	123	127
25	110	160	115	115	115	75	85	85	16	16	16	4–φ14	4–φ14	4–φ14	95	93	140	137
32	130	180	140	140	140	100	100	100	18	18	18	4–φ18	4–φ18	4–φ18	102	100	152	148
40	160	220	150	150	150	110	110	110	18	18	18	4–φ18	4–φ18	4–φ18	117	115	170	168
50	190	230	165	165	365	125	125	125	20	20	20	4–φ18	4–φ18	4–φ18	140	155	174	195
65		250	185	185	185	145	145	145	20	20	22	4–φ18	4–φ18	4–φ18		198		270
80		280	200	200	200	160	160	160	22	22	24	8–φ18	8–φ18	8–φ18		210		295
100		350	220	220	235	180	180	190	24	24	24	8–φ18	8–φ18	8–φ22		250		344
125		400	250	250	270	210	210	220	26	26	26	8–φ18	8–φ18	8–φ26		305		422
150		440	285	285	300	240	240	250	26	26	28	8–φ22	8–φ22	8–φ26		358		485
200		500	340	340	360	295	295	310	28	30	30	12–φ22	12–φ22	12–φ26		450		602
250		580	395	405	425	350	355	370	28	32	32	12–φ22	12–φ22	12–φ30		503		710
300		670	445	460	485	400	410	430	28	32	34	16–φ22	16–φ22	16–φ30		578		815
350		780	550	520	555	460	470	490	30	36	38	16–φ26	16–φ26	16–φ33		598		844
400		850	565	580	620	515	525	550	32	38	40	20–φ26	20–φ26	16–φ36		618		872
450		850	615	640	670	565	585	600	32	40	42	20–φ26	20–φ26	20–φ36		693		978
500		1000	670	715	730	620	650	660	34	42	44	20–φ33	20–φ33	20–φ36		765		1080

Whatsapp:+852-59345951 E-mail: info@valve-yz.com Skype: blue.sky1



Whatsapp:+852-59345951 E-mail: info@valve-yz.com Skype: blue.sky1

Whatsapp:+852-59345951 E-mail: info@valve-yz.com Skype: blue.sky1

快装接头Quick connector

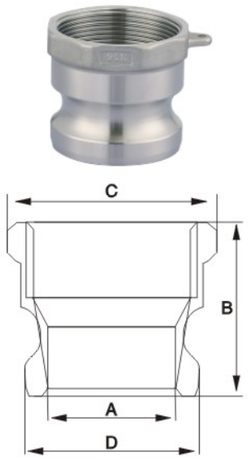

快速接头A型
Quick Joint Type A

A型：一边是卡在母头里的接头，一边是内螺纹的连接的丝口

Type A: one side is stuck in the mother, head of the joint part is the internal thread connecting wire

主要外形尺寸 Main outer size

SIZE	DIM	A	B	C	D
15	1/2	14.5	36	26	24
20	3/4	21	39.5	31	31.3
25	1	24	45.5	39	26.3
32	$1^{1/4}$	30	54	48	45.3
40	$1^{1/2}$	38	55	54	53
50	2	47	60	66	63
65	1/2	59	72	82	75.3
80	3	76	69	95	91.3
100	4	102	72	122	119
125	5	127	72	150	145
150	6	154	72	178	175

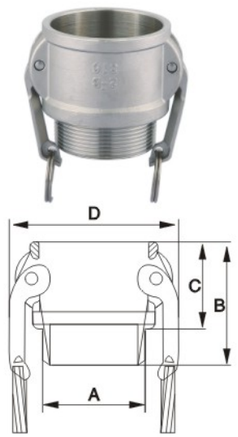

快速接头B型
Quick Joint Type B

B型：一边是带两个拉耳卡公头的凹槽，一边是外螺纹的丝口

Type B: on one side is to take two male head of grooves and silk mouth on one side is male

主要外形尺寸 Main outer size

SIZE	DIM	A	B	C	D
15	1/2	20.9	45	29	42
20	3/4	26.4	50	34	52
25	1	33.2	58	39	58
32	$1^{1/4}$	41.9	66	45	72
40	$1^{1/2}$	47.8	66	45	78
50	2	59.6	72	51	93
65	1/2	75.2	79	52	107
80	3	87.9	85	55	130
100	4	113	87	57	158
125	5	138.4	91	58	188
150	6	163.8	94	58	225

Whatsapp:+852-59345951 E-mail: info@valve-yz.com Skype: blue.sky1

YUzheng Valve Pipefitting Manufacturing 誉正阀门 www.valve-yz.com

快装接头Quick connector

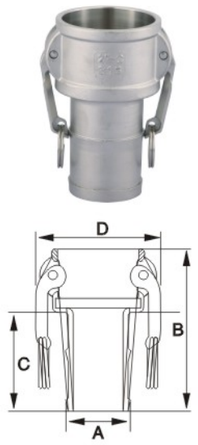

快速接头C型
Quick Joint Type C

C型：一边是带两个拉耳卡公头的凹槽，一边是有竹节状的软管接头

Type C: one side is to take two male head of groove and one side is a bamboo-like hose connection

主要外形尺寸 Main outer size

SIZE	DIM	A	B	C	D
15	1/2	14	65	36	42
20	3/4	20	82	48	52
25	1	25	96	57	58
32	$1^{1/4}$	32	110	65	72
40	$1^{1/2}$	38	115	70	78
50	2	51	126	75	93
65	1/2	65	134	82	107
80	3	76	148	93	130
100	4	102	154	97	158
125	5	128	169	111	188
150	6	154	196	139	225

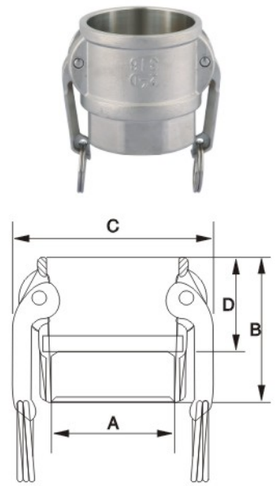

快速接头D型
Quick Joint Type D

D型：一边是带两个拉耳卡公头的凹槽，一边是有内螺纹连接的丝口

Type D: one side is to take two male head of groove and one side is a female connection wire

主要外形尺寸 Main outer size

SIZE	DIM	A	B	C	D
15	1/2	18.6	44	42	29
20	3/4	24.1	49	52	34
25	1	30.3	59	58	39
32	$1^{1/4}$	38.9	64	72	45
40	$1^{1/2}$	44.8	66	78	45
50	2	56.6	74	93	51
65	1/2	72.2	79	107	52
80	3	85	83	130	55
100	4	110	89	158	57
125	5	135.4	91	188	58
150	6	161	93	225	58

Whatsapp:+852-59345951 E-mail: info@valve-yz.com Skype: blue.sky1

快装接头Quick connector



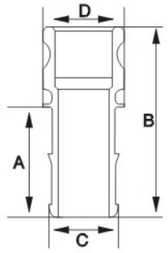

快速接头E型
Quick Joint Type E

E型：一边是卡在母头里的接头，一边是带有竹节状的软管接头

Type E: one side is stuck in the mother, the head of the joint on one side is with bamboo-like hose connection

主要外形尺寸 Main outer size

SIZE	DIM	A	B	C	D
15	1 / 2	36	73	14	24
20	3 / 4	48	86	20	31.3
25	1	57	101	25	26.3
32	$1^{1/4}$	64	116	32	45.3
40	$1^{1/2}$	70	125	38	53
50	2	76	137	51	67
65	1 / 2	80	144	65	75.3
80	3	92	158	76	91.3
100	4	98	165	102	119
125	5	111	183	128	145
150	6	139	212	154	175



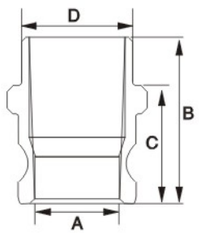

快速接头F型
Quick Joint Type F

F型：一边是卡在母头里的接头，一边是带有外螺纹连接的丝扣

Type F: one side is stuck in the mother's head joint, one side is the hose connection with external thread connection

主要外形尺寸 Main outer size

SIZE	DIM	A	B	C	D
15	1 / 2	14.5	51	36	20.9
20	3 / 4	21	53	39.5	26.4
25	1	24	63	45.5	33.2
32	$1^{1/4}$	30	72	54	41.9
40	$1^{1/2}$	38	74	55	47.8
50	2	47	80	60	59.6
65	1 / 2	59	89	72	75.2
80	3	76	96	69	87.9
100	4	102	102	72	113
125	5	127	104	72	138.4
150	6	154	108	72	163.8

Whatsapp:+852-59345951 E-mail: info@valve-yz.com Skype: blue.sky1

YUzheng Valve Pipefitting Manufacturing 誉正阀门 www.valve-yz.com

快装接头Quick connector

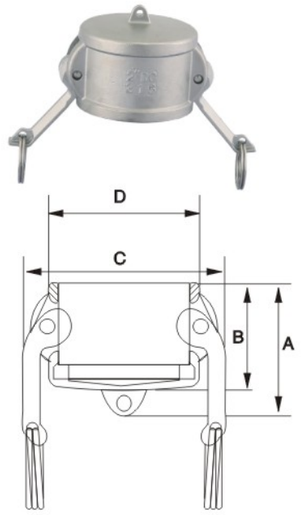

快速接头DC型
Quick Joint Type DC

DC型：是带两个拉耳可以，卡进公头圆形堵头

DC: is two ears can card brought into male head round plug

主要外形尺寸 Main outer size

SIZE	DIM	A	B	C	D
15	1 / 2	38	30	42	32
20	3 / 4	44	35	52	39
25	1	49	40	58	44
32	$1^{1/4}$	57	47	72	55
40	$1^{1/2}$	59	48	78	63
50	2	65	57	93	74
65	1 / 2	70	58	107	87
80	3	71	59	130	105
100	4	72	60	158	132
125	5	73	62	188	161
150	6	77	62	225	191



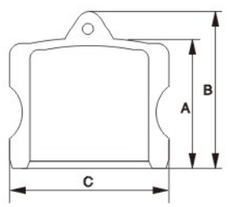

快速接头DP型
Quick Joint Type DP

DP型：是一个圆型堵头，也叫快装堵头

DP model: is a circular plug, also called the quick plug

主要外形尺寸 Main outer size

SIZE	DIM	A	B	C
15	1 / 2	28	36	24
20	3 / 4	31	39	31.3
25	1	35	45	26.3
32	$1^{1/4}$	42	52	45.3
40	$1^{1/2}$	45	55	53
50	2	51	63	63
65	1 / 2	53	64	75.3
80	3	56	68	91.3
100	4	58	73	119
125	5	67	80	145
150	6	67	80	175

Whatsapp:+852-59345951 E-mail: info@valve-yz.com Skype: blue.sky1

快装接头Quick connector



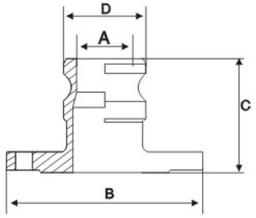

带法兰阳端快速接头
A type with flange

主要外形尺寸 Main outer size

SIZE	DIM	A	B	C	D
15	1/2	14.5	36	26	24
20	3/4	21	39.5	31	31.3
25	1	24	45.5	39	26.3
32	$1^{1/4}$	30	54	48	45.3
40	$1^{1/2}$	38	55	54	53
50	2	47	60	66	63
65	1/2	59	72	82	75.3
80	3	76	69	95	91.3
100	4	102	72	122	119
125	5	127	72	150	145
150	6	154	72	178	175



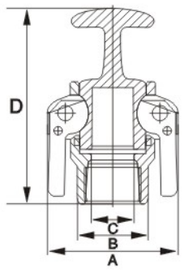

快速接头KJB型
Quick Joint Type KJB

快速接头KJB型 主要外形尺寸 Main outer size

SIZE	DIM	A	B	C	D
25	1	74	38	30.3	105
50	2	104	67	56.6	134

Whatsapp:+852-59345951 E-mail: info@valve-yz.com Skype: blue.sky1

YUzheng Valve Pipefitting Manufacturing 誉正阀门 www.valve-yz.com

快装接头Quick connector



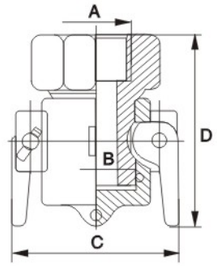

快速接头KJA型
Quick Joint Type KJA

快速接头KJA型 主要外形尺寸 Main outer size

SIZE	DIM	A	B	C	D
25	1	30.3	38	80	74
50	2	56.6	65	91	104



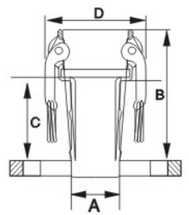

带法兰阴端快速接头
C type with flange

主要外形尺寸 Main outer size

SIZE	DIM	A	B	C	D
15	1/2	14	65	36	42
20	3/4	20	82	48	52
25	1	25	96	57	58
32	$1^{1/4}$	32	110	65	72
40	$1^{1/2}$	38	115	70	78
50	2	51	126	75	93
65	1/2	65	134	82	107
80	3	76	148	93	130
100	4	102	154	97	158
125	5	128	169	111	188
150	6	154	196	139	225

Whatsapp:+852-59345951 E-mail: info@valve-yz.com Skype: blue.sky1



Whatsapp:+852-59345951 E-mail: info@valve-yz.com Skype: blue.sky1

Whatsapp:+852-59345951 E-mail: info@valve-yz.com Skype: blue.sky1

丝扣管件Threaded fitting



90° 弯头
90° Elbow

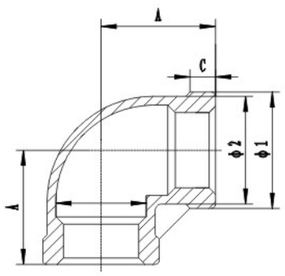

主要外形尺寸 Main outer size

SIZE	ϕ1	ϕ2	C	A
1/8	13.9	12.2	5.5	17
1/4	16.9	14.9	6	19
3/8	20.2	18.4	6	23
1/2	26.9	24.9	6	27
3/4	31.9	29.9	7	31.5
1	39.9	37.9	8	36.5
11/4	48.9	46.4	9	42.5
11/2	55.4	52.9	10	47.5
2	67.4	64.9	11	56
21/2	84.5	82	13	68
3"	98.5	95.5	15	77.5



三通
Tee

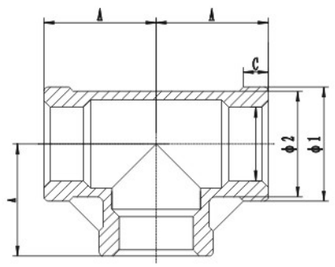

主要外形尺寸 Main outer size

SIZE	ϕ1	ϕ2	C	A
1/8	13.9	12.2	5.5	17
1/4	16.9	14.9	6	19
3/8	20.2	18.4	6	23
1/2	26.9	24.9	6	27
3/4	31.9	29.9	7	31.5
1	39.9	37.9	8	36.5
11/4	48.9	46.4	9	42.5
11/2	55.4	52.9	10	47.5
2	67.4	64.9	11	56
21/2	84.5	82	13	68
3"	98.5	95.5	15	77.5



六角外丝
Hexagon nipple

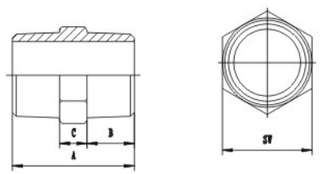

主要外形尺寸 Main outer size

SIZE	A	B	C	SW	角数
1/8	28	11	6	13	6
1/4	32	13	6	15	6
3/8	37	15	7	19	6
1/2	42	17	8	23	6
3/4	45	18	9	29	6
1	49	19	11	36	8
11/4	54	21	12	45	8
11/2	56	22	12	51	8
2	65	26	13	63	8
21/2	76	31	14	78	8
3	80	33	14	92	8
4	86	36	14	117	8

Whatsapp:+852-59345951 E-mail: info@valve-yz.com Skype: blue.sky1

YUzheng Valve Pipefitting Manufacturing 誉正阀门 www.valve-yz.com

丝扣管件Threaded fitting



内丝
Socket banded

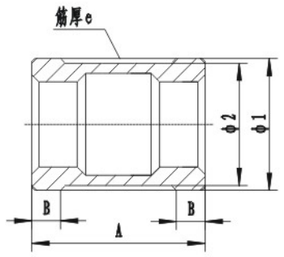

主要外形尺寸 Main outer size

SIZE	ϕ1	ϕ2	B	e	A
1/8	13.9	12.2	5.5	2.5	25
1/4	16.9	14.9	6	2.5	25
3/8	20.2	18.4	6	2.5	30
1/2	26.9	24.9	6	3	35
3/4	31.9	29.9	7	3	39
1	39.9	37.9	8	3	44
11/4	48.9	46.4	9	3.5	50
11/2	55.4	52.9	10	3.5	54
2	67.4	64.9	11	4	63
21/2	84.5	82	14	4	71.5
3	98.5	95.5	15	4.5	77
4	124	121	17	5	86



活接
Union

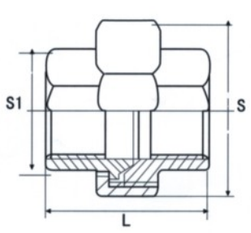

主要外形尺寸 Main outer size

SIZE	L	S	S1
1/4	31	29*8	17*8
3/8	34	34*8	21*8
1/2	38	34*8	24*8
3/4	43	47*8	31*8
1"	49	53*8	38*8
1–1/4	51	64*8	47*8
1–1/2	54	70*8	53*8
2"	61	87.5*8	65*8
2–1/2	69.5	107*10	81*10
3"	82	120*10	94*10
4"	98	147*10	120*10



四通
Cross

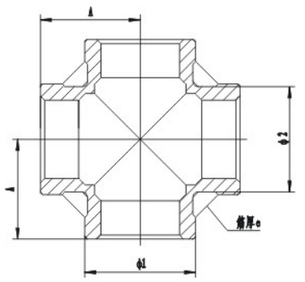

主要外形尺寸 Main outer size

SIZE	ϕ1	ϕ2	E	A
1/8	13.9	12.2	2.5	17
1/4	16.9	14.9	2.5	19
3/8	20.2	18.4	2.5	23
1/2	26.9	24.9	3	27
3/4	31.9	29.9	3	31.5
1	39.9	37.9	3	36.5
11/4	48.9	46.4	3.5	42.5
11/2	55.4	52.9	3.5	47.5
2	67.4	64.9	4	56

Whatsapp:+852-59345951 E-mail: info@valve-yz.com Skype: blue.sky1

丝扣管件Threaded fitting

主要外形尺寸 Main outer size

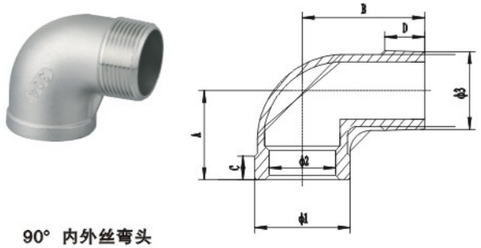

90° 内外丝弯头
90° Street Elbow

SIZE	ϕ1	ϕ2	ϕ4	A	B	C	D
1/8	13.9	8	10.2	17	24	5.5	7
1/4	16.9	10.7	13.5	20	28	6.5	10
3/8	20.2	14.2	17.2	23	32	7	10
1/2	26.9	17.8	21	28	37	7	13
3/4	31.9	22.8	26.6	32	43	8	15
1"	39.9	28.7	33.6	38	52	10	17
11/4	48.9	37.3	42.4	43	59	11	19
11/2	55.4	43.8	48.4	48	64	12	19
2"	67.4	55.3	60.3	57	74	13	24

主要外形尺寸 Main outer size

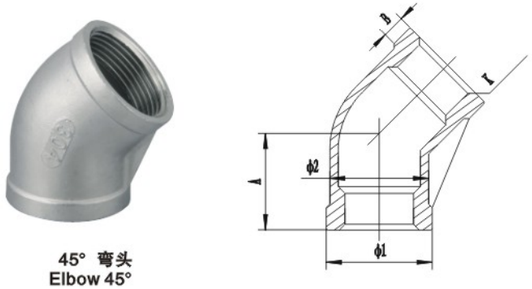

45° 弯头
Elbow 45°

SIZE	ϕ1	ϕ2	A	B	K
1/2	26.9	24.9	21	3	1.5
3/4	31.9	29.9	25	7	1.5
1	39.9	37.9	29	8	1.5
11/4	48.9	46.4	33	9	2
11/2	55.4	52.9	37	10	2
2	67.4	64.9	42	11	2

主要外形尺寸 Main outer size

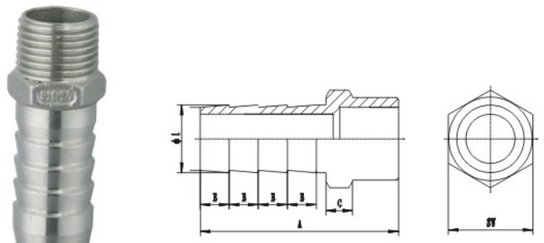

水管接头
Hose nipple

SIZE	ϕ1	A	C	E	SW	方数
1/8	8	38	6	5	12	6
1/4	8	42	6	5	15	6
3/8	10	48	7	5.5	19	6
1/2	14	60	8	8	23	6
3/4	19	65	9	9	29	6
1	26	75	11	10	36	8
11/4	32	84.5	12	12	45	8
11/2	38	90	12	13	51	8
2	51	99	13	14	63	8
21/2	63	106	12	15	78	8
3	76	114	12	16	92	8
4	102	124	14	17	118	8

Whatsapp:+852-59345951 E-mail: info@valve-yz.com Skype: blue.sky1

YUzheng Valve Pipefitting Manufacturing 誉正阀门 www.valve-yz.com

丝扣管件Threaded fitting

主要外形尺寸 Main outer size

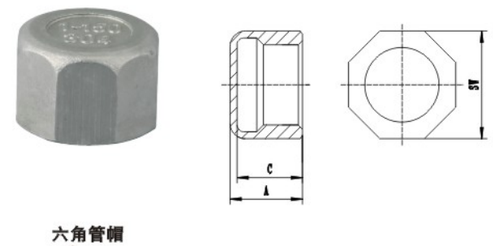

六角管帽
Cap

SIZE	A	C	SW	方数
1/8	15		12.8	6
1/4	15		15.5	6
3/8	16	9.5	19	6
1/2	20	11.5	26.5	6
3/4	22	14	31.5	8
1	26	15	38.5	8
11/4	28	17	47.5	8
11/2	32	17	54	8
2	34	25	66	8
4	44		121.5	8

主要外形尺寸 Main outer size

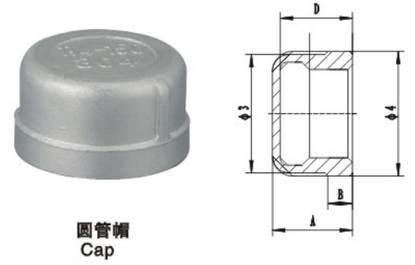

圆管帽
Cap

SIZE	ϕ3	ϕ4	A	B	D
1/8	12.2	13.9	15	5.5	12.6
1/4	14.9	16.9	15	6	12.6
3/8	18.4	20.2	16	6	13.6
1/2	24.9	26.9	20	6	17.5
3/4	29.9	31.9	22	7	19.5
1	37.9	39.9	26	8	23.5
11/4	46.4	48.9	28	9	25
11/2	52.9	55.4	30	10	26.5
2	64.9	67.4	34	11	30.5
21/2	80	84	39	13	35.5
3	94.5	98	42	15	38

主要外形尺寸 Main outer size

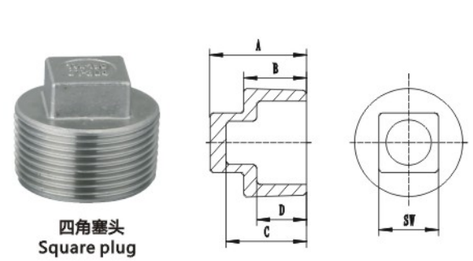

四角塞头
Square plug

SIZE	A	B	C	D	SW
1/8	13	6.5	10.5	4.5	6
1/4	17.5	11	15	8.7	8
3/8	17.5	11	15	8.7	10
1/2	21	13	18.5	10.7	12
3/4	24	14.5	21	12.2	17
1	27.5	17	24.5	14.5	19
11/4	34	23	31	20.5	23
11/2	35.5	23.5	32.5	21	26
2	39.5	26.5	36	23.5	31.5
21/2	39	27	35	23.5	32
3	44	30	40	26	36

Whatsapp:+852-59345951 E-mail: info@valve-yz.com Skype: blue.sky1

丝扣管件Threaded fitting

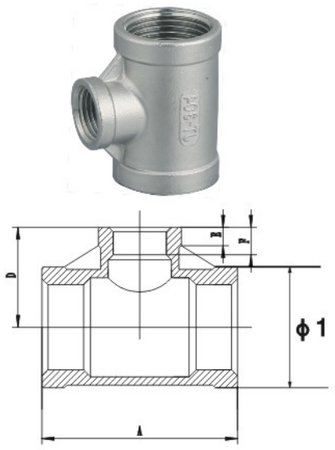

异径三通 Red.tee

主要外形尺寸 Main outer size

SIZE	ϕ1	A	D	E	F
3/8*1/8	20.2	38	19	5.5	
3/8*1/4	20.2	40	22	6	
1/2*1/4	26.9	44	25	6	
1/2*3/8	26.9	48	26	6	
3/4*1/4	31.9	48	28	6	
3/4*3/8	31.9	52	28	6	
3/4*1/2	31.9	58	30	6	9.5
1*3/8	39.9	56	32	6	
1*1/2	39.9	64	34	6	9.5
1*3/4	39.9	68	36	7	11.5
11/4*1/2	48.9	66	38	6	9.5
11/4*3/4	48.9	72	40	7	11.5
11/4*1	48.9	80	42	8	14
11/2*1/2	55.4	70	41	6	9.5
11/2*3/4	55.4	76	43	7	11.5
11/2*1	55.4	84	45	8	14
J1/2*11/4	55.4	92	47	9	15
2*1/2	67.4	70	47	6	9.5
2*3/4	67.4	76	49	7	11.5
2*1	67.4	84	51	8	14
2*11/4	67.4	92	53	9	15
2*11/2	67.4	98	55	10	17



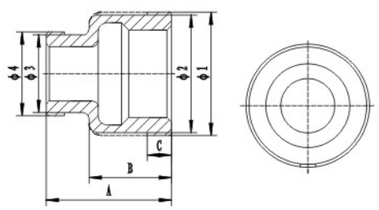

异径内丝管箍 Red.socket Banded

主要外形尺寸 Main outer size

SIZE	ϕ1	ϕ2	ϕ3	ϕ4	A	B	C
1/4*1/8	16.9	14.9	13.9	12.2	26	17	6
3/8*1/8	20.2	18.4	13.9	12.2	28	19	6
1/2*1/8	26.9	24.9	14.5	12.8	30	21	6
3/8*1/4	20.2	18.4	16.9	14.9	30	19	6
1/2*1/4	26.9	24.9	16.9	14.9	32	21	6
1/2*3/8	26.9	24.9	20.2	18.4	34	21	6
3/4*1/4	32	30	17	15	34	24	7
3/4*3/8	31.9	29.9	20.2	18.4	36	24	7
3/4*1/2	31.9	29.9	26.9	24.9	38	24	7
1*1/2	39.9	37.9	26.9	24.9	41	27	8
1*3/4	39.9	37.9	31.9	29.9	42	27	8
1*1/4	39.5	37.5	17	15	37	27	8
1*3/8	39.5	37.5	20.5	18.5	39	27	8
1 1/4*1/2	48.9	46.4	26.9	24.9	43	29	9
1 1/4*3/4	48.9	46.4	31.9	29.9	44	29	9
1 1/4*1	48.9	46.4	39.9	37.9	45	29	9
1 1/2*1/2	55.4	52.9	26.9	24.9	45	31	10
1 1/2*3/4	55.4	52.9	31.9	29.9	46	31	10
1 1/2*1	55.4	52.9	30.9	37.9	47	31	10
1 1/2*2 1/4	55.4	52.9	48.9	46.4	49	31	10
2*1/2	67.4	64.9	26.9	24.9	45	31	11
2*3/4	67.4	64.9	31.9	29.9	46	31	11
2*1	67.4	64.9	39.9	37.9	47	31	11
2*1 1/4	67.4	64.9	48.9	46.4	49	31	11
2*1 1/2	67.4	64.9	55.4	52.9	50	31	11
2 1/2*1	84	81	39.9	37.9	54	39	13
2 1/2* 1 1/4	84	81	48.9	46.4	56	39	13
3*1 1/2	98	94.5	55.5	52.5	60	42	15
2 1/2*1 1/2	84	81	55.5	52.5	57	39	13
2 1/2*2	84	81	67.5	64.5	60	39	13
3*2	98	94.5	67.5	64.5	63	42	15
3*21/2	98	94.5	84	81		42	15

Whatsapp:+852-59345951 E-mail: info@valve-yz.com Skype: blue.sky1

YUzheng Valve Pipefitting Manufacturing 誉正阀门 www.valve-yz.com

丝扣管件Threaded fitting



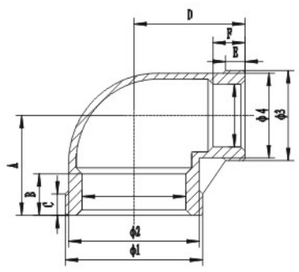

90° 异径弯头
90° Red.elbow

主要外形尺寸 Main outer size

SIZE	ϕ1	ϕ2	ϕ3	ϕ4	A	B	C	D	E	F
3/8*1/4	20.2	18.4	16.9	14.9	20		6	22	6	
1/2*1/4	26.9	24.9	16.9	14.9	22	9.5	6	25	6	
3/4*3/8	31.9	29.9	20.2	18.4	26	11.5	7	28	6	
3/4*1/2	31.9	29.9	26.9	24.9	29	11.5	7	30	6	9.5
1*1/2	39.9	37.9	26.9	24.9	32	14	8	34	6	9.5
1*3/4	39.9	37.9	31.9	29.9	34	14	8	36	7	11.5
11/4*1/2	48.9	46.4	26.9	24.9	33	15	9	38	6	9.5
11/4*3/4	48.9	46.4	31.9	29.9	36	15	9	40	7	11.5
11/4*1/2	48.9	46.4	39.9	37.9	40	15	9	42	8	14
11/2*1/2	55.4	52.9	26.9	24.9	35	17	10	41	6	9.5
11/2*3/4	55.4	52.9	31.9	29.9	38	17	10	43	7	11.5
11/2*1/2	55.4	52.9	39.9	37.9	42	17	10	45	8	14
1/2*11/4	55.4	52.9	48.9	46.4	46	17	10	47	9	15
2*1/2	67.4	64.9	26.9	24.9	35	17	11	47	6	9.5
2*3/4	67.4	64.9	31.9	29.9	38	17	11	49	7	11.5
2*1	67.4	64.9	39.9	37.9	42	17	11	51	8	14
2*11/4	67.4	64.9	48.9	46.4	46	17	11	53	9	15
2*11/2	67.4	64.9	55.4	52.9	49	17	11	55	10	17



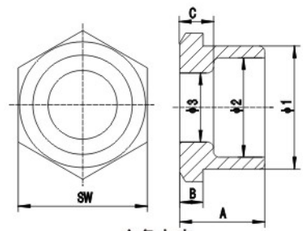

六角卜申
Hex.bushing

主要外形尺寸 Main outer size

SIZE	ϕ1	ϕ2	ϕ3	A	B	C	SW
1/4*1/8	14.2	8.3	8	19	6	6	15
3/8*1/8	17.5	11	8	20.5	6	6	19
3/8*1/4	17.5	11	10.7	20.5	6	8.8	19
1/2*1/8	21.8	15	8	22	6.5	6	23
1/2*1/4	21.8	15	10.7	22	6.5	8.8	23
1/2*3/8	21.8	15	14.2	22	6.5	9.2	23
3/4*1/8	27.6	20	8	26	7	6	28
3/4*1/4	27.6	20	10.7	26	7	8.8	28
3/4*3/8	27.6	20	14.2	26	7	9.2	28
3/4*1/2	27.6	20	17.8	26	7	9.5	28
1*3/8	34.2	26.2	14.2	27	7	9.2	35
1*1/2	34.2	26.2	17.8	27	7	9.5	35
1*3/4	34.2	26.2	23	27	7	11.5	35
11/4*3/4	43.2	34.7	23	30	7.5	11.5	44
11/4*1	43.2	34.7	29	30	7.5	13	44
11/2*1	49	40.2	29	31	8	13	50
11/2*11/4	49	40.2	37.5	31	8	15	50
2*11/4	61	51.5	37.5	33	8	15	61
2*11/2	61	51.5	43.8	33	8	17	61
1*1/8	34.2	26.2	8	27	7	6	35
1*1/4	34.2	26.2	10.7	27	7	8.8	35
11/4*1/4	43.2	34.7	10.7	30	7.5	8.8	44
11/4*3/8	43.2	34.7	14.2	30	7.5	9.2	44
11/4*1/2	43.2	34.7	17.8	30	7.5	9.5	44
11/2*3/8	49	40.2	14.2	31	8	9.2	50
11/2*1/2	49	40.2	17.8	31	8	9.5	50
11/2*3/4	49	40.2	23	31	8	11.5	50
2*1/2	61	51.5	17.8	33	8	9.5	61
2*3/4	61	51.5	23	33	8	11.5	61
2*1	61	51.5	29	33	8	13	61
21/2*1	77	65	28.7	41	10	14	78
21/2*11/4	77	65	37.3	41	10	15	78
21/2*11/2	77	65	43.8	41	10	17	78
21/2*2	77	65	55.3	41	10	17	78
3*11/2	91.2	78	43.8	44	11	17	92
3*2	91.2	78	55.3	44	11	17	92
3*21/2	91.2	78	69.5	44	11	23	92
4*3	116	103	80.5	48	12	25	118

Whatsapp:+852-59345951 E-mail: info@valve-yz.com Skype: blue.sky1

丝扣管件Threaded fitting

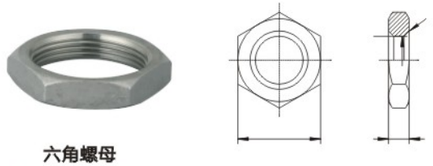

六角螺母
Hexagon nut

主要外形尺寸 Main outer size

Size	ϕ	H	SW	C	方数
1/8	8.5	5.7	19	1	6
1/4	11.4	5.8	21	1.5	6
3/8	14.8	6.8	25	1.5	6
1/2	18.5	7.5	31	2	6
3/4	24	8.5	35.5	2	6
1"	30.2	9.5	45	2.5	6
11/4	38.8	10	53	2.5	6
11/2	44.6	11.3	58	2.5	6
2"	55.4	12	71.5	2.5	6

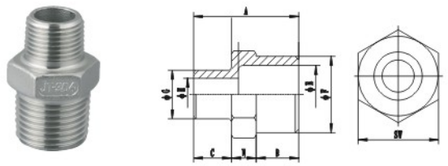

异径六角外螺纹接头
Red.Hex.Nipple

主要外形尺寸 Main outer size

SIZE	A	B	C	SW	边数
1/4*1/8	30	13	6	15	6
3/8*1/8	33	15	7	19	6
3/8*1/4	35	15	7	19	6
1/2*1/4	38	17	8	23	6
1/2*3/8	40	18	8	23	6
3/4*1/4	40	18	9	29	6
3/4*3/8	42	19	9	29	6
3/4*1/2	44	18	9	29	6
1*3/8	45	19	11	36	8
1*1/2	47	19	11	36	8
1*3/4	48	19	11	36	8
1 1/4*1/2	50	21	12	45	8
1 1/4*3/4	51	21	12	45	8
1 1/4*1	52	21	12	45	8
1 1/2*1/2	51	22	12	51	8
1 1/2*3/4	52	22	12	51	8
1 1/2*1	53	22	12	51	8
1 1/2*1 1/4	55	22	12	51	8
2*1/2	56	26	13	63	8
2*3/4	57	26	13	63	8
2*1	58	26	13	63	8
2*1 1/4	60	26	13	63	8
2*1 1/2	61	26	13	63	8
2 1/2*1 1/2	67	31	14	78	8
2 1/2*2	71	31	14	78	8



六角塞头
Hexagon plug

主要外形尺寸 Main outer size

SIZE	L	L1	L2	H	边数
1/8	17		6	12	6
1/4	18	16	6	15	6
3/8	20	18	6	18	6
1/2	22	20	7	23	6
3/4	25	22.5	7	28	6
1	25.5	23	7.5	35	8
11/4	29	26	8	44	8
11/2	31	28	9	50	8
2	35	31.5	10	62	8



Whatsapp:+852-59345951 E-mail: info@valve-yz.com Skype: blue.sky1

Whatsapp:+852-59345951 E-mail: info@valve-yz.com Skype: blue.sky1

不锈钢无缝管件Stainless steel seamless fitting

ASME/ANSI B16.9、B16.28 对焊弯头 Butt-Welding Elbows and Returns

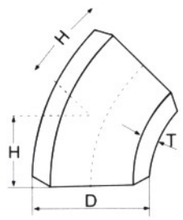

45°弯头
45°Elbow

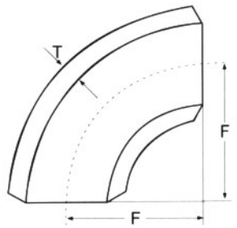

90°弯头
90°Elbow

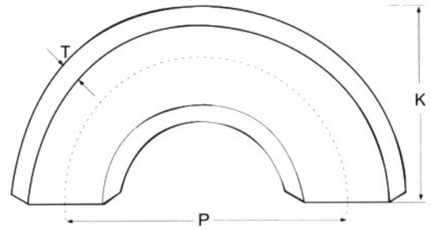

180°弯头
Return

公称通径 Nor-minal Pipe Size DN	端部外径 Outside Diameter at Bevel D	中心至端面 Genter to End			中心至中心 Genter to Center		背面至端面 Back to Faces	
		45° 弯头 Elbows.	90° 弯头 Elbows.		180° 弯头 Return			
		H	F		P		K	
		长半径 Long Radius	长半径 Long Radius	短半径 Short Radius	长半径 Long Radius	短半径 Short RadiUS	长半径 Long Radius	短半径 Short Radius.
1/2	21.3	15.7	38.1	–	76.2	–	47.8	–
3/4	26.7	191	381	–	76.2	–	50.8	–
1	33.4	22.4	38.1	25.4	76.2	50.8	55.6	411
1 1/4	42.2	25.4	4788	318	95.3	63.6	699	52.3
1 1/2	48.3	28.4	57.2	38.1	1143	762	82.6	62. 0
2	60.3	35.1	76.2	50.8	152.4	101.6	1066	81. 0
2 1/2	73.0	44.5	953	63.5	190.5	1270	1318	1001
3	88.9	50.8	1143	76.2	228.6	152.4	158.8	120.7
3 1/2	1016	57.2	133.4	88.9	266.7	177.8	184.2	1397
4	114.3	635	152.4	101.6	304.8	203.2	209.6	1588
5	141.3	79.2	190.5	127.0	381.0	254.0	261.9	196.9
6	168.3	95.3	228.6	152.4	4572	304.8	312.7	2365
8	219.1	127.0	304.8	203.2	609.6	4064	414.3	3127
10	273.1	158.8	381.0	254.0	762.0	5080	5177	3907
12	323.9	1905	457.2	304.8	914.4	609.6	619.3	4669
14	355.6	222.3	533.4	355.6	1066.8	711.2	711.2	533.4
16	406.4	254.0	6096	406.4	1219.2	812.8	812.8	6096
18	457.2	285.8	685.8	457.2	1317.6	914.4	9144	685.8
20	508.0	317.5	762.0	508.0	1524.0	1016.0	1016. 0	762.0
22	558.8	342.9	838.2	558.8	1676.4	1117.6	1117.6	838.2
24	609.6	381. 0	914.4	609.6	1828.8	1219.2	1219.2	914.4
26	660.4	406.0	990.6					
28	711.2	438.2	1066.8					
30	762.0	469.9	1143. 0					
32	812.8	501.7	1219.2					
34	863.6	533.4	1295.4					
36	914.4	565.2	1371.6					
38	965.2	599.9	1447.8					
40	1016. 0	632.0	1524. 0					
42	1066.8	660.4	1600.2					
44	1117.6	695.5	1676.4					
46	1168.4	726.9	1752.6					
48	1219.2	758.9	1828.8					

注：表中长半径弯头取自ASME / ANSIB 16.9，短半径弯头取自ASME / ANSIB 16.28。

Note: From the table, the information of long-radius elbow takes from ASME/ANStB 16.9 and the information of short-radius from ASME/ANSIB 16.28.

Whatsapp:+852-59345951 E-mail: info@valve-yz.com Skype: blue.sky1

YUzheng Valve Pipefitting Manufacturing 誉正阀门 www.valve-yz.com

不锈钢无缝管件Stainless steel seamless fitting

ASME/ANSI B16.9 对焊等径三通、四通 Butt-Welding Straight Tee and Cross

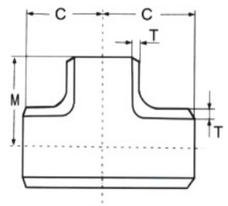

等径三通
Straight Tee

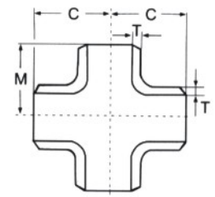

等径四通
Straight Cross

ASME/ANSI B16.9 对焊异径三通、四通 Butt-Welding Reducing tee and Reducing Cross

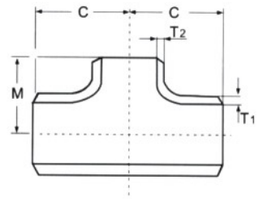

异径三通
Reducing Tee

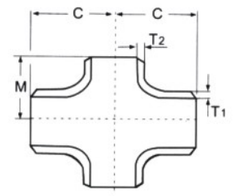

异径四通
Reducing Cross

公称通径 Nor-minal Pipe Size DN(in)	端部外径 Outside Diameter at Bevel	中心至端面 Genter to End	
	T	C	M
1/2	21.3	25.4	
3/4	26.7	28.4	
1	33.4	38.1	
11/4	42.2	47.8	
11/2	48.3	57.2	
2	60.3	635	
21/2	73.0	76.2	
3	88.9	85.9	
31/2	101.6	95.3	
4	114.3	104.6	
5	141.3	124.0	
6	168.3	142.7	
8	219.1	177.8	
10	273.1	215.9	
12	323.9	254.0	
14	355.6	279.4	
16	406.4	304.8	
18	457.2	342.9	
20	508.0	381.0	
22	558.8	419.1	
24	609.6	431.8	
26	660.4	495.3	
28	711.2	520.7	
30	762.0	558.8	
32	812.8	596.9	
34	863.6	635.0	
36	914.4	673.1	
38	965.2	711.2	
40	1016.0	749.3	
42	1066.8	726.0	711.2
44	1117.6	812.8	762.0
46	1168.4	850.9	800.1
48	1219.2	889.0	838.2

公称通径 Nor-minal Pipe Size DN(in)	端部外径 Outside Diameter at Bevel	中心至端面 Genter to End	
	T1xT2	C	M
1/2×3/8	21.3x17.1	25.4	
1/2×1/4	21.3x13.7		
3/4X1/2	26.7x21.3	28.4	
3/4X3/8	26.7x17.1		
1X3/4	33.4x26.7	38.1	
1×1/2	33.4x21.3		
11/2×1	42.2x33.7	47.8	
11/4×3/4	42.2x26.7		
11/4x1/2	42.2x21.3		
11/2x11/4	48.3x42.2	57.2	
11/2×1	48.3x33.4		
11/2X3/4	48.3×26.7		
11/21/2	48.3x21.3		
2X11/2	60.3×48.3	63.5	60.5
2X11/4	60.3x42.2		57.2
2×1	60.3×33.4		50.8
2×3/4	60.3×26.7		44.5
21/2×2	73.0×60.3	76.2	69.9
21/2×11/2	73.0x48.3		66.5
21/2X21/4	73.0x42.2		63.5
21/2×1	73.0x33.4		57.2
3X21/2	88.9x73.0	85.9	82.6
3X2	88.9x60.3		76.2
3X11/2	88.9×48.3		73.2
3X11/4	88.9x42.2		69.9
31/2×3	101.6x88.9	95.3	91.9
31/2X21/2	101.6x73.0		88.9
31/2×2	101.6×60.3		82.6
31/2×11/2	101.6x48.3		79.2
4x31/2	114.3x101.6	104.6	101.6
4X3	114.3×88.9		98.6
4x21/2	114.3×73.0		95.3
4X2	114.3X60.3		88.9

Whatsapp:+852-59345951 E-mail: info@valve-yz.com Skype: blue.sky1

不锈钢无缝管件Stainless steel seamless fitting

ASME/ANSI B16.9 对焊异径三通、四通 Butt-Welding Reducing tee and Reducing Cross

公称通径 Nor-minal Pipe Size DN(in)	端部外径 Outside Diameter at Bevel	中心至端面 Genter to End	
	T1xT2	C	M
4x11/2	114.3x48.3	104.6	85.9
5x4	141.3x114.3	124.0	117.3
5x31/2	141.3x106.6		114.3
5x3	141.3x88.9		111.3
5x21/2	141.3x73.0		108.0
5x2	141.3x60.3		104.6
6x5	168.3x141.3	142.7	136.7
6x4	168.3x114.3		130.0
6x31/2	168.3x101.6		127.0
6x3	168.3x88.9		124.0
6x21/2	168.3x73.0		120.7
8x6	219.1x168.3	177.8	168.1
8x5	219.1x141.3		162.1
8x4	219.1x114.3		155.4
8x31/2	219.3x101.6		152.4
10x8	273.1x219.1	215.9	203.2
10x6	273.1x168.3		193.5
10x5	273.1x141.3		190.5
10x4	273.1x114.3		184.2
12x10	323.9x273.1	254.0	241.3
12x8	323.9x219.1		228.6
12x6	323.9x168.3		218.9
12x5	323.9x141.3		215.9
14x12	355.6x323.9	279.4	269.7
14x10	355.6x273.1		257.0
14x8	355.6x219.1		247.7
14X6	355.6x168.3		238.3
16x14	406.4x355.6	304.8	304.8
16x12	406.4x323.9		295.1
16x10	406.4x273.1		282.4
16x8	406.4x219.1		273.1
16x6	406.4x168.3		263.7
18x16	457.2x406.4	342.9	330.2
18x14	457.2x355.6		330.2
18x12	457.2x323.9		320.5
18x10	457.2x273.1		307.8
18x8	457.2x219.1		298.5
20x18	508.0x457.2	381.0	368.3
20x16	508.0x406.4		355.6
20x14	508.0x355.6		355.6
20x12	508.0x323.9		345.9
20x10	508.0x273.1		333.2
20x8	508.0x219.1		323.9
22x20	558.8x508.0	419.1	406.4
22x18	558.8x457.2		393.7
22x16	558.8x406.4		381.0

公称通径 Nor-minal Pipe Size DN(in)	端部外径 Outside Diameter at Bevel	中心至端面 Genter to End	
	T1xT2	C	M
22x14	558.8x355.6	41.9.1	381.0
22x12	558.8x323.9		371.3
22x10	558.8x273.1		358.6
24x22	609.6x558.8	431.8	431.8
24x20	609.6x508.0		431.8
24x18	609.6x457.2		419.1
24x16	609.6x406.4		406.4
24x14	609.6x355.6		406.4
24x12	609.6x323.9		396.7
24x10	609.6x273.1		384.0
26x24	660.4x609.6	495.3	482.6
26x22	660.4x558.8		469.9
26x20	660.4x508.0		457.2
26x18	660.4x457.2		444.5
26x16	660.4x406.4		431.8
26x14	660.4x355.6		431.8
26x12	660.4x323.9		422.1
28x26	711.2x660.4	520.7	520.7
28x24	711.2x609.6		508.0
28x22	711.2x558.8		495.3
28x20	711.2x508.0		482.6
28x10	711.2x457.2		469.9
28x16	711.2x406.4		457.2
28x14	711.2x355.6		457.2
28x12	711.2x323.9		447.5
30x28	762.0x711.2	558.8	546.1
30x26	762.0x660.4		546.1
30x24	762.0x609.6		533.4
30x22	762.0x558.8		520.7
30x20	762.0x508.0		508.0
30x18	762.0x457.2		495.3
30x16	762.0x406.4		482.6
30x14	762.0x355.6		482.6
30x12	762.0x323.9		472.9
30x10	762.0x273.1		460.2
32x30	812.8x762.0	596.9	584.2
32x28	812.8x711.2		571.5
32x26	812.8x660.4		571.5
32x24	812.8x609.6		558.8
32x22	812.8x558.8		546.1
32x20	812.8x508.8		533.4
32x18	812.8x457.2		520.7
32x16	812.8x406.4		508.0
32x14	812.8x355.6		508.0
34x32	863.6x812.8	635.0	622.3
34x30	863.6x762		609.6

Whatsapp:+852-59345951 E-mail: info@valve-yz.com Skype: blue.sky1

YUzheng Valve Pipefitting Manufacturing 誉正阀门 www.valve-yz.com

不锈钢无缝管件Stainless steel seamless fitting

ASME/ANSI B16.9 对焊异径三通、四通 Butt-Welding Reducing tee and Reducing Cross

公称通径 Nor-minal Pipe Size DN(in)	端部外径 Outside Diameter at Bevel	中心至端面 Genter to End	
	T1xT2	C	M
34x28	863.6x711.2	635.0	596.9
34x26	863.6x660.4		596.9
34x24	863.6x609.6		584.2
34x22	863.6x558.8		571.5
34x20	863.6x508.0		558.8
34x18	863.6x457.2		546.1
34x16	863.6x406.4		533.4
36x34	914.4x863.6	673.1	660.4
36x32	914.4x812.8		647.7
36x30	914.4x762.0		635.0
36x28	914.4x711.2		622.3
36x26	914.4x660.4		622.3
36x24	914.4x609.6		609.6
36x22	914.4x558.8		596.9
36x20	914.4x508.0		584.2
36x18	914.4x457.2		571.5
36x16	914.4x406.4		558.8
38x36	965.2x914.4	711.2	711.2
38x34	965.2x863.6		698.5
38x32	965.2x812.8		685.8
38x30	965.2x762.0		673.1
38x28	965.2x711.2		647.7
38x26	965.2x660.4		647.7
38x24	965.2x609.6		635.0
38x22	965.2x558.8		622.3
38x20	965.2x508.0		609.6
38x18	965.2x457.2		596.9
40x38	1016.0x965.2	749.3	749.3
40x36	1016.0x914.4		736.6
40x34	1016.0x863.6		723.9
40x32	1016.0x812.8		711.2
40x30	1016.0x762.0		698.5
40x28	1016.0x711.2		673.1
40x26	1016.0x660.4		673.1
40x24	1016.0x609.6		660.4
40x22	1016.0x558.8		647.7
40x20	1016.0x508.0		635.0
40x18	1016.0x457.2		622.3
42x40	1066.8x1016.0	762.0	711.2
42x38	1066.8x965.2		711.2
42x36	1066.8x914.4		711.2
42x34	1066.8x863.6		711.2
42x32	1066.8x812.8		711.2
42x30	1066.8x762.0		711.2

公称通径 Nor-minal Pipe Size DN(in)	端部外径 Outside Diameter at Bevel	中心至端面 Genter to End	
	T1xT2	C	M
42x28	1066.8×711.2	762.0	698.5
42x26	1066.8x660.4		698.5
42x24	1066.8x609.6		660.4
42x22	1066.8x558.8		660.4
42x20	1066.8x508.0		660.4
42x18	1066.8x457.2		647.7
42x16	1066.8x406.4		635.0
44x42	1117.6x1066.8	812.8	762.0
44x40	1117.6x1016.0		749.3
44x38	1117.6x965.2		736.6
44x36	1117.6x914.4		723.9
44x34	1117.6x863.6		723.9
44x32	1117.6x812.8		711.2
44x30	1117.6x762.0		711.2
44x28	1117.6x711.2		698.5
44x26	1117.6x660.4		698.5
44x24	1117.6x609.6		698.5
44x22	1117.6x558.8		685.8
44x20	1117.6x508.0		685.8
46x44	1168.4x1117.6	850.9	800.1
46x42	1168.4x1066.8		787.4
46x40	1168.4x1016.0		774.7
46x38	1168.4x965.2		762.0
46x36	1168.4x914.4		762.0
46x34	1168.4x863.6		749.3
46x32	1168.4x812.8		749.3
46x30	1168.4x762.0		736.6
46x28	1168.4x711.2		736.6
46x26	1168.4x660.4		736.6
46x24	1168.4x609.6		723.9
46x22	1168.4x558.8		723.9
48x46	1219.2x1168.4	889.0	838.2
48x44	1219.2x1117.6		838.2
48x42	1219.2x1066.8		812.8
48x40	1219.2x1016.0		812.8
48x38	1219.2x965.2		812.8
48x36	1219.2x914.4		787.4
48x34	1219.2x863.6		787.4
48x32	1219.2x812.8		787.4
48x30	1219.2x762.0		762.0
48x28	1219.2x711.2		762.0
48x26	1219.2x660.4		762.0
48x24	1219.2x609.6		736.6
48x22	1219.2x558.8		736.6

Whatsapp:+852-59345951 E-mail: info@valve-yz.com Skype: blue.sky1

不锈钢无缝管件Stainless steel seamless fitting

ASME/ANSI B16.9 对焊同心、偏心异径管 Butt-Welding Concentric &Eccentric Reducers

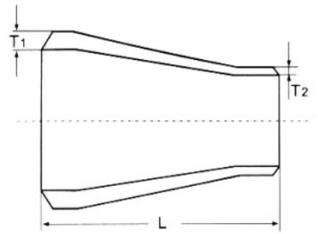

同心异径管
Concentric Reduer

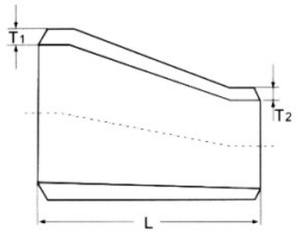

偏心异径管
Eccentric Reduer

公称通径 Nor-minal Pipe Size DN(in)	端部外径 Outside Diameter at Bevel T1XT2	长度 End to End L
3/4X1/2 3/4X3/8	26.7X21.3 26.7X17.1	38.1
1X3/4 1X2/2	33.4X26.7 33.4X21.3	50.8
11/4X1 11/4X3/4 11/4X1/2	42.2X33.4 42.2X26.7 42.2X21.3	50.8
11/2X11/4 11/2X1 11/2X3/4 11/2X1/2	48.3X42.2 48.3X33.4 48.3X26.7 48.3X21.3	63.5
2X11/2 2X11/4 2X1 2X3/4	60.3X48.3 60.3X42.2 60.3X33.4 60.3X26.7	76.2
21/2X2 21/2X11/2 21/2X11/4 21/2X1	70.3X60.3 73.0X48.3 73.0X42.2 73.0X33.4	88.9
3X21/2 3X2 3X11/2 3X11/4	88.9X73.0 88.9X60.3 88.9X48.3 88.9X42.2	88.9
31/2X3 31/2X21/2 31/2X2 31/2X11/2 31/2X11/4	102.6X88.9 101.6X73.0 101.6X60.3 201.6X48.3 101.6X42.2	101.6
4x31/2 4x3	214.3X101.6 124.3X88.9	101.6

公称通径 Nor-minal Pipe Size DN(in)	端部外径 Outside Diameter at Bevel T1XT2	长度 End to End L
4X21/2 4X2 4X11/2	114.3X73.0 114.3X60.3 114.3X48.3	101.6
5X4 5X31/2 5X3 5X21/2 5X2	141.3X114.3 141.3X101.6 141.3X88.9 141.3X73.0 141.3X60.3	127.0
6X5 6X4 6X31/2 6X2 6X21/2	168.3X141.3 168.3X114.3 168.3X101.6 168.3X88.9 168.3X73.0	139.7
8X6 8X5 8X4 8X31/2	219.1X168.3 219.1X141.3 219.1X114.3 219.1X101.6	152.4
10X8 10X6 10X5 10X4	273.1X219.1 273.1X168.3 273.1X141.3 273.1X114.3	177.8
12X10 12X8 12X6 12X5	323.9X273.1 323.9X219.1 323.9X168.3 323.9X141.3	203.2
14X12 14X10 14X8 14X6	355.6X323.9 355.6X273.1 355.6X219.1 355.6X168.3	330.2
16X14	406.4X355.6	355.6

Whatsapp:+852-59345951 E-mail: info@valve-yz.com Skype: blue.sky1

YUzheng Valve Pipefitting Manufacturing 誉正阀门 www.valve-yz.com

不锈钢无缝管件Stainless steel seamless fitting

ASME/ANSI B16.9 对焊同心、偏心异径管 Butt-Welding Concentric &Eccentric Reducers

公称通径 Nor-minal Pipe Size DN(in)	端部外径 Outside Diameter at Bevel T1XT2	长度 End to End L
16X12 16X10 16X8	406.4X323.9 406.4X273.1 406.4X219.1	355.6
18X16 18X14 18X12 18X10	457.2X406.4 457.2X355.6 457.2X323.9 457.2X273.1	381.0
20X18 20X16 20X14 20X12	508.0X457.2 508.0X406.4 508.0X355.6 508.0X323.9	508.0
22X20 22X18 22X16 22X14	558.8X508.0 558.8X457.2 558.8X406.4 558.8X355.6	508.0
24X22 24X20 24X18 24X16	609.6X558.8 609.6X508.0 609.6X457.2 609.6X406.4	508.0
26X24 26X22 26X20 26X18	660.4X609.6 660.4X558.8 660.4X508.0 660.4X457.2	609.6
28X26 28X24 28X20 28X18	711.2X660.4 711.2X609.6 711.2X508.0 711.2X457.2	609.6
30X28 30X26 30X24 30X20	762.0X711.2 762.0X660.4 762.0X609.6 762.0X508.0	609.6
32X30 32X28 32X26 32X24	812.8X762.0 812.8X711.2 812.8X660.4 812,8X609.6	609.6
34X32 34X30	863.6X812.8 863.6X762.0	609.6

公称通径 Nor-minal Pipe Size DN(in)	端部外径 Outside Diameter at Bevel T1XT2	长度 End to End L
34X26 34X24	863.6X660.4 863.6X609.6	609.6
36X34 36X32 36X30 36X26 36X24	914.4X863.6 914.4X812.8 914.4X762.0 914.4X660.4 914.4X609.6	609.6
38X36 38X34 38X32 38X30 38X28 38X26	965.2X914.4 965.2X863.6 965.2X812.8 965.2X762.0 965.2X711.2 965.2X660.4	609.6
40X38 40X36 40X34 40X32 40X30	1016.0X965.2 1016.0X914.4 1016.0X863.6 1016.0X812.8 1016.0X762.0	609.6
42X40 42X38 42X36 42X34 42X32 42X30	1066.8X1016.0 1066.8X965.2 1066.8X914.4 1066.8X863.6 1066.8X812.8 1066.8X762.0	609.6
44X42 44X40 44X38 44X36	1117.6X1066.8 1117.6X1016.0 1117.6X965.2 1117.6X914.4	609.6
46X44 46X42 46X40 46X38	1168.4X1117.6 1168.4X1066.8 1168.4X1016.0 1168.4X965.2	711.2
48X46 48X44 48X42 48X40	1219.2X1168.4 1219.2X1117.6 1219.2X1066.8 1219.2X1016.0	711.2

Whatsapp:+852-59345951 E-mail: info@valve-yz.com Skype: blue.sky1

不锈钢无缝管件Stainless steel seamless fitting

MSS SP-43、ASME/ANSI B16.9-86翻边短接 Lap Joint Stub Ends

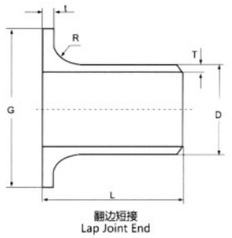

公称通径 Nor-minal Pipe Size DN(in)	端部外径 Outside Diameter at Bevel	长度 End to End L		圆角半径 Redius of fillet		搭接直径 DianeterOfLap
				A型	B型	
	D	MSS SP-43	ASME	R		G
1/2	21.3	50.8	76.2	3.0	0.8	35.0
3/4	26.7	50.8	76.2	3.0	0.8	42.9
1	33.4	50.8	101.6	3.0	0.8	50.8
1 1/4	42.2	50.8	101.6	4.8	0.8	63.5
1 1/2	48.3	50.8	i01.6	6.4	0.8	73.2
2	60.3	63.5	152.4	7.9	0.8	91.9
2 1/2	73.0	63.5	152.4	7.9	0.8	104.6
3	88.9	63.5	152.4	9.6	0.8	127.0
3 1/2	101.6	76.2	152.4	9.6	0.8	139.7
4	114.3	76.2	152.4	11.2	0.8	157.2
5	141.3	76.2	203.2	11.2	1.6	185.7
6	168.3	88.9	203.2	12.7	1.6	215.9
8	219.1	101.6	203.2	12.7	1.6	269.7
10	273.0	127.0	254	12.7	1.6	323.9
12	323.8	152.4	254	12.7	1.6	381.0
14	355.6	152.4	304.8	12.7	1 ~ 6	412.8
16	406.4	152.4	304.8	12.7	1.6	469.9
18	457.0	152.4	304.8	12.7	1.6	533.4
20	508.0	152.4	304.8	12.7	1.6	584.2
22	559	–	304.8	12.7	–	641.4
24	609.6	152.4	304.8	12.7	1.6	692.2

注Note：①搭接厚度t不小于公称壁厚。当采用榫槽面、凹凸面等密封面时，心须增加搭接厚度。
Bonding thickness(t)not less than nominal thickness The bonding thickness should be increased for tongue-groove seal face，male & female face and so on
②适用于与sch40s或更薄的不锈钢管子联接。
Suitable for the coupling of stainless tubes with sch40s or thinner.
③R尺寸符合ANSI B16.5中搭接法兰凸缘所规定的半径，请订货时注明圆角半径的型式。
R Size accords with the radius stipulated in ASNI B16.5 relating to bonding flange, please indicate the radius type as placing orders
④L或G尺寸另有要求时，请订货时说明。
Please indicate as ordering for the requirements on the sizes of L or G
⑤圆每半径R只Y,-}MSS SP—43翻边短接有效。
Radius R is only valid for lap joint stub ends of MSS Sp—43

Whatsapp:+852-59345951 E-mail: info@valve-yz.com Skype: blue.sky1

YUzheng Valve Pipefitting Manufacturing 誉正阀门 www.valve-yz.com

不锈钢无缝管件Stainless steel seamless fitting

管帽 Cap

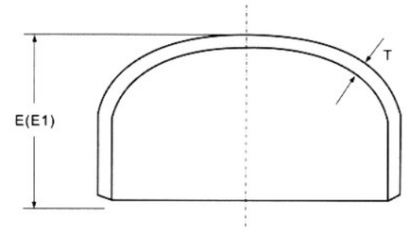

管帽 Cap

公称通径 Nor-minal Pipe Size DN(in)	端部外径 Outside Diameter at Bevel	全长 Length		对尺寸E的限制厚度 Liniting Wall Thickness for Length E
	T	E	E1	
1/2	21.3	25.4	25.4	3.73
3/4	26.7	25.4	25.4	3.91
1	33.4	38.1	38.1	4.55
1 1/4	42.2	38.1	38.1	4.85
1 1/2	48.3	38.1	38.1	5.08
2	60-3	38.1	44.5	5.54
2 1/2	73.0	38.1	50.8	7.01
3	88.9	50.8	63.5	7.62
3 1/2	101.6	63.5	76.2	8.08
4	114.3	63.5	76.2	8.56
5	141.3	76.2	88.9	9.53
6	168.3	88.9	101.6	10.97
8	219.1	101.6	127.0	12.70
10	273.1	127.0	152.4	12.70
12	323.9	152.4	177.8	12.70
14	355.6	165.1	190.5	12.70
16	406.4	177.8	203.2	12.70

公称通径 Nor-minal Pipe Size DN(in)	端部外径 Outside Diameter at Bevel	全长 Length		对尺寸E的限制厚度 Liniting Wall Thickness for Length E
	T	E	E1	
18	457.2	203.2	228.6	12.70
20	508.0	228.6	254.0	12.70
22	558.8	254.0	254.0	12.70
24	609.6	266.7	304.8	12.70
26	660.4	266.7	–	–
28	711.2	266.7	–	–
30	762.0	266.7	–	–
32	812.8	266.7	–	–
34	863.6	266.7	–	–
36	914.4	266.7	–	–
38	965.2	304.8	–	–
40	1016.0	304.8	–	–
42	1066.8	304.8	–	–
44	1117.6	342.9	–	–
46	1168.4	342.9	–	–
48	1219.2	342.9	–	–

注：①管帽的全长不大于限制厚度时为E，超过限制厚度为E1。 ②壁厚T见第38页壁厚表。
Note：①E shows that the overall length of socket caps not greater than limiting thickness while E1 for exceeding the limiting thickness
②Please see the wall thickness T in Page 38 Thickness List

ASME/ANSI B16.9、B16.28 规定的对焊管件焊接端坡口的结构形式
End Preperation of Butt-Welding Fittings to ASME/ANSI B16.9、B16.28

(a)壁厚≤22

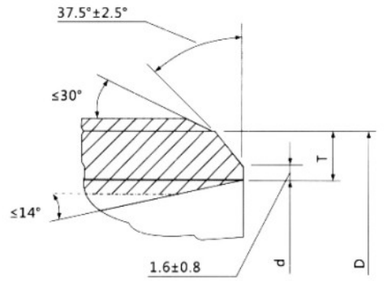

(B)壁厚有 > 22

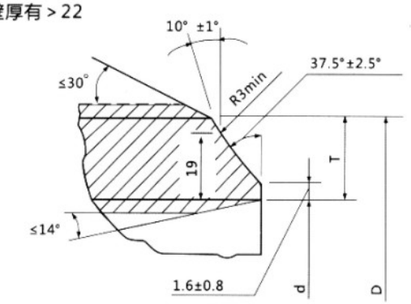

Whatsapp:+852-59345951 E-mail: info@valve-yz.com Skype: blue.sky1

不锈钢无缝管件Stainless steel seamless fitting

ASME/ANSI B16.9、B16.28对焊管件形位公差表 Tolerance sheet

项目	管件种类	公称通径DN（in）							
		1/2～2½	3～3½	4	5～8	10–18	20～24	26～30	32–48
		极限偏差							
端部外径D D1 D2	所有管件	+1.52 –0.76	±1.52		+2.29 –1.52	+4.06 –3.05	+6.35 –4.83		
端部内径 d1）2）		±0.76	±1.52			±3.05	±4.83		
壁厚T T1 T2		不小于公称壁厚的87.5%							
中心至端面H F C M	45° 90° 弯头 三通、四通	±1.52				±2.29		±3.05	+4.83
中心至中心P	180° 弯头	±6.35				±9.65		–	
背面至端面K		±6.35						–	
U		±0.76				±1.52		–	
长度L	异径管、翻边短接	±1.52				±2.29		±4.83	
全长E、E1	管帽	±3.05			±6.35			±9.65	
搭接直径G	翻边短接	0 –0.76				0 –1.52		–	
搭接厚t 圆角半径R		+1.52 0						–	
		0 –0.76		0 –1.52				–	

公称通径		1/2–4	5～8	10～12	14～16	18–24	26–30	32～42	44～48
弯头、三通、四通	X	0.76	1.52	2.29	2.29	3.05	4.83		
	Y	1.52	3.05	4.83	6.35	9.65	9.65	12.70	19.05

注：①除非用户有特殊要求，应优先保证端外径和公称壁厚的极限偏差。
②端部内径为端部外径与两倍的公称壁厚的差。
③圆度为外径正、负偏差绝对值之和。

Note: 1. Unless specially required by client, please firstly ensure limiting deviations of extemal diameter and nominal thickness.
2. The inner diameter refers to the difference of extemal diameter and twice value of nominal thickness.
3. The roundness refers to the sum of positive and negative absolute deviation.

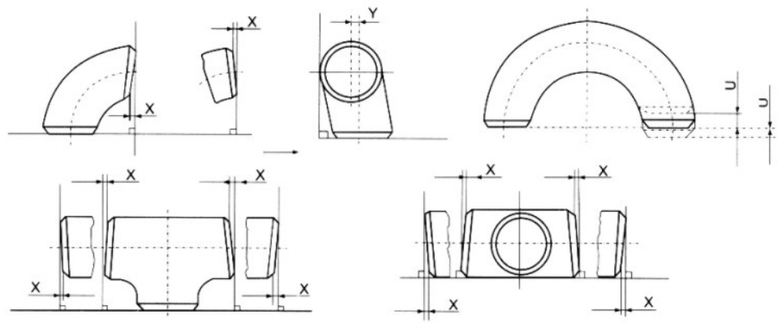

Whatsapp:+852-59345951 E-mail: info@valve-yz.com Skype: blue.sky1

YUzheng Valve Pipefitting Manufacturing 誉正阀门 www.valve-yz.com

不锈钢无缝管件Stainless steel seamless fitting

ANSI B36.10、B36.19外径尺寸和壁厚表 OD Date and thickness

公称通径 Norminal Pipe Size		管外径 mm	ANSI B36.10 B36.19																	
mm	in		Sch5s	Sch10s	Sch10	Sch20	Sch30	Sch40s	STD	Sch40	Sch60	Sch80s	XS	Sch80	Sch100	Sch120	Sch140	Sch160	XXS
6	1/8	1029	–	1.24	–	–	–	1.73	1.73	1.73	–	2.41	2.41	2.41	–	–	–	–	–
8	1/4	13.72	–	1.65	–	–	–	1.73	1.73	1.73	–	3.02	3.02	3.02	–	–	–	–	–
10	3/8	17.14	–	1.6S	–	–	–	2.31	2.31	2.31	–	3.20	3.20	3.20	–	–	–	–	–
15	1/2	2134	1.65	2.11	–	–	–	2.77	2.77	2.77	–	3.73	3.73	3.73	–	–	–	4.78	7.47
20	3/4	26.67	1.65	2.11	–	–	–	2.87	2.87	2.87	–	3.91	3.91	3.91	–	–	–	5.56	7.82
25	1	33.40	1.65	2.77	–	–	–	3.38	3.38	3.38	–	4.55	4.55	4.55	–	–	–	6.35	9.09
32	11/4	42.16	1.65	2.77	–	–	–	3.56	3.56	3.56	–	4.85	4.85	4.85	–	–	–	6.35	9.70
40	11/2	48.26	1.65	2.77	–	–	–	3.68	3.68	3.68	–	5.08	5.08	5.08	–	–	–	7.14	10.16
50	2	60.32	1.65	2.77	–	–	–	3.91	3.91	3.91	–	5.54	5.54	5.54	–	–	–	8.14	11.07
65	21/2	73.02	2.11	3.05	–	–	–	5.16	5.16	5.16	–	7.01	7.01	7.01	–	–	–	9.52	14.02
80	3	88.90	2.11	3.05	–	–	–	5.49	5.49	5.49	–	7.62	7.62	7.62	–	–	–	11.12	15.24
90	31/2	101.60	2.11	3.05	–	–	–	5.74	5.74	5.74	–	8.08	8.08	8.08	–	–	–	–	–
100	4	114.30	2.11	3.05	–	–	–	6.02	6.02	6.02	–	8.56	8.56	8.56	–	11.12	–	13.49	17.12
125	5	141.30	2.77	3.40	–	–	–	6.55	6.55	6.55	–	9.53	9.53	9.53	–	12.70	–	15.88	19.05
150	6	168.28	2.77	3.40	–	–	–	7.11	7.11	7.11	–	10.97	10.97	10.97	–	14.27	–	18.26	21.94
200	8	219.08	2.77	3.40	–	6.35	7.04	8.18	8.18	8.18	10.31	12.70	12.70	12.70	15.09	18.26	20.62	23.01	22.22
250	10	273.05	3.40	3.76	–	6.35	7.80	9.27	9.27	9.27	12.70	12.70	12.70	15.09	18.26	21.44	25.40	28.58	25.40
300	12	323.85	3.96	4.57	–	6.35	8.38	9.52	9.52	10.31	14.27	12.70	12.70	17.48	21.44	25.40	28.58	33.32	25.40
350	14	355.60	3.96	4.78	6.35	7.92	9.52	*9.52	9.52	11.13	15.09	12.70	12.70	19.05	23.83	27.79	31.75	35.71	–
400	16	406.40	4.19	4.78	6.35	7.92	9.52	*9.52	9.52	12.70	16.66	12.70	12.70	21.44	26.19	30.96	36.52	40.49	–
450	18	457.20	4.19	4.78	6.35	7.92	11.12	*9.52	9.52	14.27	19.05	12.70	12.70	23.82	29.36	34.92	39.47	45.24	–
500	20	508.00	4.78	5.54	6.35	9.52	12.70	*9.52	9.52	15.09	20.62	12.70	12.70	26.19	32.54	38.10	44.45	50.01	–
550	22	558.8	4.78	5.54	6.35	9.52	12.70	*9.52	9.52	–	22.22	12.70	12.70	28.58	34.92	41.28	47.62	53.98	–
600	24	609.6	5.54	6.35	6.35	9.52	14.27	*9.52	9.52	17.48	24.61	12.70	12.70	30.96	38.89	46.02	52.37	59.54	–
650	26	660.4	–	*7.92	7.92	12.70	–	*9.52	9.52	–	–	12.70	12.70	–	–	–	–	–	–
700	28	711.2	–	*7.92	7.92	12–70	15.88	*9.52	9.52	–	–	12.70	12.70	–	–	–	–	–	–
750	30	762.0	6.35	*7.92	792	12.70	15.88	*9.52	9.52	–	–	12.70	12.70	–	–	–	–	–	–
800	32	812.0	–	*7.92	7.92	12.70	15.88	*9.52	9.52	17.48	–	1.2.70	12.70	–	–	–	–	–	–
850	34	863.6	–	*7.92	7.92	12.70	15.88	*9.52	9.52	17.48	–	12.70	12.70	–	–	–	–	–	–
900	36	914.4	–	*7.92	7.92	12.70	15.88	*9.52	9.52	19.05	–	12.70	12.70	–	–	–	–	–	–
950	38	965.2	–	*7.92	–	–	–	*9.52	9.52	–	–	12.70	12.70	–	–	–	–	–	–
1000	40	1016.0	–	*7.92	–	–	–	*9.52	9.52	–	–	12.70	12.70	–	–	–	–	–	–
1050	42	1066.8	–	*7.92	–	–	–	*9.52	9.52	–	–	12.70	12.70	–	–	–	–	–	–
1100	44	1117.6	–	*7.92	–	–	–	*9.52	9.52	–	–	12.70	12.70	–	–	–	–	–	–
1150	46	1168.4	–	*7.92	–	–	–	*9.52	9.52	–	–	12.70	12.70	–	–	–	–	–	–
1200	48	1219.2	–	*7.92	–	–	–	*9.52	9.52	–	–	12.70	12.70	–	–	–	–	–	–
1300	52	1320.8	–	–	–	–	–	–	*9.52	–	–	–	12.70	–	–	–	–	–	–
1350	54	1371.6	–	–	–	–	–	–	*9.52	–	–	–	12.70	–	–	–	–	–	–
1400	56	1422.4	–	–	–	–	–	–	*9.52	–	–	–	12.70	–	–	–	–	–	–
1500	60	1524.0	–	–	–	–	–	–	*9.52	–	–	–	12.70	–	–	–	–	–	–
1600	64	1625.6	–	–	–	–	–	–	*9.52	–	–	–	12.70	–	–	–	–	–	–
1700	68	1727.2	–	–	–	–	–	–	*9.52	–	–	–	12.70	–	–	–	–	–	–
1800	72	1828.8	–	–	–	–	–	–	*9.52	–	–	–	12.70	–	–	–	–	–	–
1900	76	1930.4	–	–	–	–	–	–	*9.52	–	–	–	12.70	–	–	–	–	–	–
2000	80	2032.0	–	–	–	–	–	–	*9.52	–	–	–	12.70	–	–	–	–	–	–

Whatsapp:+852-59345951 E-mail: info@valve-yz.com Skype: blue.sky1

不锈钢无缝管件Stainless steel seamless fitting

重量表 Weight Lists

对焊90° 长半径弯头 Butt-welding90° L/R Elbows kg

公称通径 Norminal Pipe Size		Sch20	STD	Sch40	XS	Sch80
A(mm)	B(in)					
15	1/2	–	0.08	0.08	0.10	0.10
20	3/4	–	0.11	0.11	0.13	0.13
25	1	–	0.15	0.15	0.21	0.21
32	11/4	–	0.25	0.25	0.36	0.36
40	11/2	–	0.39	0.39	0.52	0.52
50	2	–	0.66	0.66	0.96	0.96
65	21/2	–	1.37	1.37	1.80	1.80
80	3	–	2.19	2.19	2.87	2.87
90	31/2	–	2.96	2.96	4.06	4.06
100	4	–	4.13	4.13	5.60	5.60
125	5	–	6.89	6.89	9.62	9.62
150	6	–	10.7	10.7	26.5	26.5
200	8	16.5	22.6	21.6	31.6	31.6
250	10	25.8	37.0	37.0	49.9	60.7
300	12	36.1	56.0	56.0	71.6	97.4
350	14	60.2	71.4	85.1	92.0	139
400	16	78.0	93.6	121	121	200
450	18	87.7	119	176	153	287
500	20	147	147	232	190	396
550	22	178	178	–	230	515
600	24	212	212	377	275	635
650	26	320	249	–	323	–
700	28	371	290	–	375	–
750	30	426	333	–	432	–
800	32	484	379	675	492	–
850	34	546	428	763	555	–
900	36	612	480	950	622	–
950	38	–	535	–	694	–
1000	40	–	594	–	769	–
1050	42	–	655	–	849	–
1100	44	–	728	–	932	–
1150	46	–	786	–	1019	–
1200	48	–	856	–	1110	–

对焊90° 短半径弯头 Butt-welding90° S/R Elbows kg

公称通径 Norminal Pipe Size		Sch20	STD	Sch40	XS	Sch80
A(mm)	B(in)					
25	1	–	0.11	0.11	0.13	0.13
32	11/4	–	0.17	0.17	0.24	0.24
40	11/2	–	0.24	0.24	0.34	0.34
50	2	–	0.44	0.44	0.68	0.68
65	21/2	–	0.91	0.91	1.18	1.18
80	3	–	1.36	1.36	1.91	1.91
90	31/2	–	1.96	1.96	2.58	2.58
200	4	–	2.77	2.77	3.54	3.54
225	5	–	4.40	4.40	6.46	6.46
250	6	–	7.12	7.12	20.6	20.6
200	8	12.0	14.1	14.1	21.1	21.1
250	10	16.8	24.6	24.6	33.2	40.4
300	22	24.1	37.0	40.6	47.7	65.0
350	14	40.2	42.6	54.5	62.3	92.4
400	16	51.9	62.2	80.4	80.4	133
450	28	65.7	79.1	217	102	184
500	20	97.9	97.9	155	126	255
550	22	229	229	–	154	333
600	24	142	242	251	183	424

注：①重量表以美国标准中的产品尺寸为计算依据。 ②表列重量为近似重量，供参考。
③对焊弯头只列出90° 弯头重量，45° 和180° 弯头分别按90° 弯头的1/2和2倍计算。

Note:
①. The Weight List is calculated on the basis of product sizes stipulated in USA standards.
②. The listed weight is approximate weight only for reference.
③. Only list the weight of 90° elbow for butt-welding elbow, the weights of 45° and 180° elbows are calculated as the1/2 and 2 times of that of 900elbow

Whatsapp:+852-59345951 E-mail: info@valve-yz.com Skype: blue.sky1

YUzheng Valve Pipefitting Manufacturing 誉正阀门 www.valve-yz.com

不锈钢无缝管件Stainless steel seamless fitting

GB12459、GB/T13401 对焊异径三通、四通 Butt-Welding Reducing Outlet Tees and Reducing Outlet Crosses

公称通径 Norminal Pipe size DN	端部外径 Outside Diameter at Bevel				中心至端面 Genter to End	
	D1		D2		C	M
	A系列 SeriesA	B系列 SeriesB	A系列 SeriesA	B系列 SeriesB		
300×125	323.9	325	139.7	133	254	216
350×300	355.6	377	323.9	325	279	270
350×250	355.6	377	273.0	273	279	257
350×200	355.6	377	219.1	219	279	248
350×150	355.6	377	168.3	159	279	238
400×350	406.4	426	355.6	377	305	305
400×300	406.4	426	323.9	325	305	295
400×250	406.4	426	273.0	273	305	283
400×200	406.4	426	219.1	219	305	273
400×150	406.4	426	168.3	159	305	264
450×400	457.2	478	406.4	426	343	330
450×350	457.2	478	355.6	377	343	330
450×300	457.2	478	323.9	325	343	321
450×250	457.2	478	273.0	273	343	308
450×200	457.2	478	219.1	219	343	298
500×450	508.0	529	457.2	478	381	368
500×400	508.0	529	406.4	426	381	356
500×350	508.0	529	355.6	377	381	356
500×300	508.0	529	323.9	325	381	346
500×250	508.0	529	273.0	273	381	333
500×200	508.0	529	219.1	219	381	324
550×500	559	–	508	–	419	406
550×450	559	–	457	–	419	394
550×400	559	–	406	–	419	381
600×550	610	–	559	–	432	432
600×500	610	630	508	530	432	432
600×450	610	630	457	480	432	419
650×600	660	–	610	–	495	483
650×550	660	–	559	–	495	470
650×500	660	–	508	–	495	457
700×650	711	–	660	–	521	521
700×600	711	720	610	630	521	508

公称通径 Norminal Pipe size DN	端部外径 Outside Diameter at Bevel				中心至端面 Genter to End	
	D1		D2		C	M
	A系列 SeriesA	B系列 SeriesB	A系列 SeriesA	B系列 SeriesB		
700×550	711	–	599	–	521	495
750×700	762	–	711	–	559	546
750×650	762	–	660	–	559	546
750×600	762	–	610	–	559	533
800×750	813	–	762	–	597	584
800×700	813	820	711	720	597	572
800×650	813	–	660	–	597	572
850×800	864	–	813	–	635	622
850×750	864	–	762	–	635	610
850×700	864	–	711	–	635	597
900×850	914	–	864	–	673	660
900×800	914	920	813	820	673	648
900×750	914	–	762	–	673	635
950×900	965	–	914	–	711	711
950×850	965	–	864	–	711	698
950×800	965	–	813	–	711	686
1000×950	1016	–	965	–	749	749
1000×900	1016	1020	914	920	749	737
1000×850	1016	–	864	–	749	724
1050×1000	1067	–	1016	–	762	711
1050×950	1067	–	965	–	762	711
1050×900	1067	–	914	–	762	711
1100×1050	1118	–	1067	–	813	762
1100×1000	1118	1120	1016	1020	813	749
1100×950	1118	–	965	–	813	737
1150×1100	1168	–	1118	–	851	800
1150×1050	1168	–	1067	–	851	787
1150×1000	1168	–	1016	–	851	775
1200×1150	1220	–	1168	–	889	838
1200×1100	1220	1220	1118	1120	889	838
1200×1050	1220	–	1067	–	889	813

注：1、尽可能不采用括号内的数值。 2、优先选择A系列。

Whatsapp:+852-59345951 E-mail: info@valve-yz.com Skype: blue.sky1

不锈钢无缝管件Stainless steel seamless fitting

常用材料的化学成分和力学系能 Chemical Composition and Mechanical Properties of Material

国别 Countries	标准 Standard	类别 Category	材料牌号 Material	化学成份(%) Chemical Composition								力学性能 Mechanical Properties		
				C	SI	MN	P≤	S≤	NI	CR	MO	V	其它 Others	σb (Mpa)	σS(Mpa)	δS(%)
中国 China	GB8163	钢管	20	0.17~0.24	0.17~0.37	0.35~0. 65	0.035	0.035	≤0.25	≤0.25	0.40~0.55	-	Cu≤0.25	390~530	245	20
	GB6479	钢管	16Mn	0.12~0.20	0.20~0.60	1.20~1.60	0.040	0.040	-	-	0.40~0.55	-	Cu≤0.25	490~670	320	21
	GB6479	钢管	12CrMo	0.08~0.15	0.17~0.37	0.40~0.70	0.035	0.035	≤0.30	0.40~0.70	0.25~0.35	-	Cu≤0.25	410~560	205	21
	GB6479	钢管	15CrMo	0.12~0.18	0.17~0.37	0.40~0.70	0.035	0.035	≤0.30	0.80~1.10	-	-	Cu≤0.25	440~640	235	21
	GB5310	钢管	12Cr1MoV	0.08~0.15	0.17~0.37	0.40~0.70	0.035	0.035	-	0.90~1.20	1.80~2.50	0.15~0.30	Cu≤0.25	471~638	255	21
	GB2270	钢管	1Cr18Ni9Ti	≤0.12	≤1.00	≤2.00	0.035	0.030	8.00~11.00	17.00~19.00	-	-	Ti5(C%~0.02)~0.08	≥540	-	40
	GB2270	钢管	0Cr18Ni12M02Ti	≤0.08	≤1.00	≤2.00	0.035	0.030	11.00~14.00	16.00~19.00	2.00~3.00	-	Ti5xC%~0.70	≥510	-	42
	GB2270	钢管	00Cr19Ni11	≤0.030	≤1.00	≤2.00	0.035	0.030	9.00~13.00	18.00~20.00	-	-	-	≥481	-	40
	GB2270	钢管	00Cr17Ni14M02	≤0.030	≤1.00	≤2.00	0.035	0.030	12.00~15.00	16.00~18.00	-	-	-	≥481	-	40
	GB3274	钢板	Q235A	0.14~0.22	≤0.30	0.30~0.65	0.045	0050	-	-	-	-	-	375~460	235	26
	GB6654	钢板	16MnR	≤0.20	0.20~0.60	1.20~1.60	0.035	0.035	-	-	-	-	-	510~655	345	21
美国 U.S.A	ASTMA106	钢管	WPS	≤0.30	≤0.10	0.29~1.06	0.035	0.035	-	-	-	-	-	≥415	240	22
	ASTMA312	钢管	TP304	≤0.08	≤0.75	≤2.00	0.040	0.030	8. 00~11.00	18.0~20.0	2.00~3.00	-	-	≥515	205	35
	ASTMA312	钢管	TP3041	≤0.035	≤0.75	≤2.00	0.040	0.030	8.00~13.00	18.0~20.0	2.00~3.00	-	-	≥485	170	35
	ASTMA312	钢管	TP316	≤0.08	≤0.75	≤2.00	0.040	0.030	10.0~14.0	16.0~18.0	-	-	-	≥515	205	35
	ASTMA312	钢管	TP3161	≤0.035	≤0.75	≤2.00	0.040	0.030	10.0~150	16.0~18.0	-	-	-	≥485	170	35
	ASTMA312	钢管	TP321	≤0.08	≤0.75	≤2.00	0.040	0.030	9.00~13.00	17.0~20.0	-	-	Ti5xC%~0.07	≥485	170	35
日本 Japan	JISG3459	钢管	SUS304	≤0.08	≤1.00	≤2.00	0.040	0.030	8.00~11.00	18.00~20.00	2.00~3.00	-	-	≥520	206	35
	JISG3459	钢管	SUS3041	≤0.030	≤1.00	≤2.00	0.040	0.030	9.00~13.00	18.00~20.00	2.00~3.00	-	-	≥481	177	35
	JISG3459	钢管	SUS316	≤0.08	≤1.00	≤2.00	0.040	0.030	10.00~14.00	16.00~18.00	-	-	-	≥520	206	35
	JISG3459	钢管	SUS3161	≤0.030	≤1.00	≤2.00	0.040	0.030	12.00~16.00	16.00~18.00		-	-	≥481	177	35
	JISG3459	钢管	SUS321	≤0.08	≤1.00	≤2.00	0.040	0.030	9.00~13. 00	17.00~19.00		-	Ti>5xC%	≥520	206	35

注:①在化学成份中，标准规定分牌号的材料因用途不同或其它元素含量变化，其含镍量或含铬量允许在一定范围内增加，使用时请查阅相应标准。
②在力学性能中，对部分牌号的材料表中所列伸长率是一个代表值，其值因试样的形式或管子壁厚的不同有所变化，使用时请查阅相应标准。

YUzheng Valve Pipefitting Manufacturing 誉正阀门 www.valve-yz.com

不锈钢无缝管件Stainless steel seamless fitting

(1)钢管

中国与美国、日本的钢管、钢板的常用钢号对照表

钢种 \ 国名	中国		日本JIS		美国ASTM
	钢号	标准号	钢号	标准号	钢号
碳素钢管	20	GB/–r816387	STPG42	G3456	A 53–B A 135–B
		GB23270	STPT42	G3456	A 108–B
低合金钢管	16Mn	GB/T308782	STS49	G3455	A 210–C
			STPT49	G3456	
耐热钢管	12CrM0	GB994888	STBA20	G3462	A 335–P 2 A 369–FP 2 A 231–T 2
	15CrM0	GB994885	STBA22 STBA22	G3458 G3462	A 335–P 12 A 369–FP 12 A 231–T 12
	12Cr1M0V	GB5310	STBA23 STBA23	G3458 G3462	A 335–P 11 A 366–FP 11 A 199–T 11 A 231–T 11
	Cr5M0	GB5310	STBA25 STBA25	G3458 G3462	A 335–P 5 A 389–FP 5 A 213–T 5
不锈钢耐酸钢管	0Cr18Ni9	GB/T14976–94	SUS304TP SUS304TB	G3459 G3463	A 312 A 376 TP 304 A 213 A 249 A 268 TP 304
	0Cr18Ni10Ti 1Cr18Ni9Ti	GB/T14976–94	SUS321TP SUS321TB	G3459 G3463	A 312 A 376 TP 321 A 213 A 240 A 268 TP 321
	00Cr19Ni10	GB/T14976–94	SUS3041TP SUS3041TB	G3459 G3463	A 312 A 376 TP 3041 A 213 A 240 A 268 TP 304L
	00Cr17Ni14M02	GB/T14976–94	SUS3161TP SUS3161TB	G3459 G3463	A 312 A 376 TP 3161 A 213 A 240 A 268 TP 3161

(2)板材

钢种 \ 国名	中国		日本JIS		美国ASTM
	钢号	标准号	钢号	标准号	钢号
碳素钢管	A3,AY3	GB700–86	SS41	G3101	A283–C
	A3R	YB536–69	SPV24	G3115	A285–C
	20G	GB713–97	SB42	G3103	A515–60级
低合金钢管	16Mn	GB1591–94	SM50–B、C	G3106	
	15MnVR	YB536–69			A225–A3级
耐热钢管	12CrMo		SCMV1	G4109	A387–2级
	15CrMo		SCMV2	G4109	A387–12级
	12Cr2Mo1		SCMV4	G4109	A387–22级
不锈钢耐酸钢管	0Cr18Ni9	YB541–70 YB542–70	SUS304	G4304 G4305	A320–304
	(1Cr18Ni9)	YB541–70 YB542–70	SUS302	G4304 G4305	A320–302
	0Cr18Ni9 1Cr18Ni9	YB541–70 YB542–70	SUS321	G4304 G4305	A320–321
	0Cr18Ni12M02Ti	YB541–70 YB542–70	SUS316	G4304 G4305	A320–316
	00Cr18Ni10	YB541–70 YB542–70	SUS304L	G4304 G4305	A320–304L
	00Cr17Ni14Mo2	YB541–70 YB542–70	SUS316L	G4304 G4305	A320–316L

Whatsapp:+852-59345951 E-mail: info@valve-yz.com Skype: blue.sky1

Whatsapp:+852-59345951 E-mail: info@valve-yz.com Skype: blue.sky1